ABB BALDOR RELIANCE

Customer information packet

1215W

2HP, 1500/1800RPM, 3PH, 50/60HZ, 3628M, GRND

Copyright © All product information within this document is subject to ABB Motors and Mechanical Inc. copyright © protection, unless otherwise noted.
11/24/2026 1:03:10 PM

Specifications

Enclosure	TENV
Frame Material	Steel
Frequency	50.00 Hz
	60.00 Hz
	50.00 Hz
	60.00 Hz
Motor Letter Type	Three Phase
Nameplate Output	2
Number of Poles	4
	4
Output @ Frequency	2.000 HP @ 60 HZ
	2.000 HP @ 50 HZ
Phase	3
	3
Product Style	GRINDER
Speed	1500 rpm
	1800 rpm
	1500 rpm
	1800 rpm
Synchronous Speed @ Frequency	1800 RPM @ 60 HZ
Voltage	208 V
	230 V
	460 V
Voltage @ Frequency	230.0 V @ 50 HZ
	208.0 V @ 60 HZ
	208.0 V @ 50 HZ
	230.0 V @ 60 HZ
	460.0 V @ 50 HZ
	460.0 V @ 60 HZ
Agency Approvals	CSA
	UR
Ambient Temperature	40 °C
Base Indicator	Rigid

Part Detail

Revision	V
Type	AC
Mech. spec.	G12-118
Base	
Status	PRD/A
Elec. spec.	G2WG0018
Layout	G2LY0118
Eff. date	06-05-2026
CD Diagram	CD0251
Poles	04
Leads	9#16 12"FRM STAT IRN Y
Proprietary	False
Created date	01-01-0001

Current @ Voltage	2.800 A @ 460.0 V 5.600 A @ 230.0 V 5.900 A @ 208.0 V
Duty Rating	CONT
Insulation Class	B
KVA Code	G
Motor Lead Quantity/Wire Size	9 @ 16 AWG
Motor Standards	Other
Motor Type	3628M
Mounting Arrangement	F1
Product Family	Grinder
Service Factor	1.00
Shaft Extension Location	Double Shaft
Shaft Rotation	Phase Seq-Opp Std Rot (CWODE)
Speed Code	Single Speed
Starting Method	Direct on line
Thermal Device - Winding	None

Nameplate

NP3412L			
CAT.NO.	1215W		
HP	2	**VOLTS**	208-230/460
PHASE	3	**AMPS**	5.9-5.6/2.8
HZ	50//60	**RPM**	1500//1800
SER.NO			
SPEC.	G12-118D-0018		
BLANK			

Parts List

Part number	Description	Quantity
SA051565	SA G12-118D-0018	1.000 ea
RA046412	RA G12-118D-0018	1.000 ea
G2BA1000A02	BASE, MACH	1.000 ea
10XN4414A20	7/16-14 X 1-1/4 HEX HD CAP SCREW	2.000 ea
HW1001A44	WASHER,7/16 SPLT LK, ZN	2.000 ea
HW1000A45X	7/16 USS FLAT WASHER X	2.000 ea
LD5000A01	LEAD ASSY, ML1400DF14 7" RING TRM EA END	1.000 ea
52XF1032G04	10-32 X 1/4, HX HD SR SL	2.000 ea
G4GS5000	G14-23 GASKET X	1.000 ea
HA6766A06	BRACKET MACHINING FOR 'SQ D' MANUAL STAR	1.000 ea
19XB2514A20	1/4-14X1-1/4 HX WS, TY B	2.000 ea
HW1001A25	LOCKWASHER 1/4, ZINC PLT .493 OD, .255 I	2.000 ea
HA2025A01	LEAD BUSHING	1.000 ea
RM1006A01	GROMMET,#2196:.75ID,.9375GROOVE DIA,.062	1.000 ea
52XN1032A04	10-32X1/4 HX HD SLTD SER X	4.000 ea
11XW1032G06	10-32 X .38, TAPTITE II, HEX WSHR SLTD U	1.000 ea
HW3001B01	D3019 BRASS WASHER(STIMP)	1.000 ea
36CB4516	750LIPPED CB LID - GALVANNEAL	1.000 ea
37GS1001SP	GASKET, CONDUIT BOX LID, .06 THICK LEXID	1.000 ea
51XW0832A07	8-32 X .44, TAPTITE II, HEX WSHR SLTD SE	4.000 ea
G2EP1900A01	ENDPLATE, MACH	2.000 ea
HW5100A08	W3118-035 WVY WSHR (WB)	2.000 ea
HA3104A13	THRUBOLT 5/16-18 X 11.750 OHIO ROD	4.000 ea
HW1001A31	LOCKWASHER 5/16, ZINC PLT.591 OD, .319 I	4.000 ea
XY3118A12	5/16-18 HEX NUT DIRECTIONAL SERRATION	4.000 ea
G2FH1805A01	L.H. GRINDER GUARD, MACH	1.000 ea
10XN3816A20	3/8-16X1 1/4 HEX HD CAP	4.000 ea
HW1001A38	LOCKWASHER 3/8, ZINC PLT .688 OD, .382 I	4.000 ea
85XU0407S04	4X1/4 U DRIVE PIN STAINLESS	2.000 ea
G2FH1804A01	R.H. GRINDER GUARD, MACH	1.000 ea
10XN3816A20	3/8-16X1 1/4 HEX HD CAP	4.000 ea

HW1001A38	LOCKWASHER 3/8, ZINC PLT .688 OD, .382 I	4.000 ea
G2AP1002A01SP	TOOL REST, MACH (G) MACHINED 6 ON	1.000 ea
HA6049A01SP	SUPPORT, TOOL REST, MACH	1.000 ea
HA6049A01SP	SUPPORT, TOOL REST, MACH	1.000 ea
10XN4420A24	7/16-20X1 1/2 HEX HD SCR	3.000 ea
HW1000A45X	7/16 USS FLAT WASHER X	3.000 ea
HW1000A45X	7/16 USS FLAT WASHER X	3.000 ea
HW1001A44	WASHER,7/16 SPLT LK, ZN	3.000 ea
G2AP1002A01SP	TOOL REST, MACH (G) MACHINED 6 ON	1.000 ea
10XN4420A24	7/16-20X1 1/2 HEX HD SCR	3.000 ea
HW1001A44	WASHER,7/16 SPLT LK, ZN	3.000 ea
G2FH1807A01	L.H. GRINDER GUARD COVER, MACH	1.000 ea
10XN3816A20	3/8-16X1 1/4 HEX HD CAP	4.000 ea
HW1001A38	LOCKWASHER 3/8, ZINC PLT .688 OD, .382 I	4.000 ea
G2FH1806A01	R.H. GRINDER GUARD COVER, MACH	1.000 ea
10XN3816A20	3/8-16X1 1/4 HEX HD CAP	4.000 ea
HW1001A38	LOCKWASHER 3/8, ZINC PLT .688 OD, .382 I	4.000 ea
HA6051	FLANGE, WHEEL, CAST	4.000 ea
HW3022J06	1/4X.625 ROLLED SPR PIN	2.000 ea
XZ2007A62SP	1 1/4-7 NUT LH HEX (NC)	1.000 ea
XZ2007A12SP	1 1/4-7 NUT RH HX(NC)(F/S	1.000 ea
G2AP1001ZP	SPARK BREAKER FOR 12" GRINDER GUARD	1.000 ea
10XN3816A16	3/8-16 X 1 HEX HD CAP SCREW	2.000 ea
HW1000A38	WASHER, 3/8" FLAT, SAE Z/P	2.000 ea
HW1001A38	LOCKWASHER 3/8, ZINC PLT .688 OD, .382 I	2.000 ea
G2AP1001ZP	SPARK BREAKER FOR 12" GRINDER GUARD	1.000 ea
10XN3816A16	3/8-16 X 1 HEX HD CAP SCREW	2.000 ea
HW1000A38	WASHER, 3/8" FLAT, SAE Z/P	2.000 ea
HW1001A38	LOCKWASHER 3/8, ZINC PLT .688 OD, .382 I	2.000 ea
MJ1000A02	GREASE, POLYREX EM EXXON	0.050 lb
HA1000A45	DR11501.020 BRG GRD,B-N	1.000 ea
GA9	EYESHIELD ASSY	1.000 ea
HA6103A01	SUPPORT ARM, EYESHIELD (PLATED)	2.000 ea
10XN3118A16	5/16-18X1 HEX HD CAP	2.000 ea

HW1001A31	LOCKWASHER 5/16, ZINC PLT.591 OD, .319 I	2.000 ea
HA6094A01SP	CLAMP FOR SUPPORT ARM X PLATED	2.000 ea
WD4102A01	SR-6L-1 HEYCO STRN RELIEF OR 23MPO6L10 M	2.000 ea
MG1000G01	MUNSELL 5.93PB 3.81/ 2.71	0.017 ga
LB1389A03	CONSOLIDATED GRINDER LABEL - 9",10",12"	1.000 ea
LB5008	TAG, CONNECTION PRINT SHOP	1.000 ea
MN909	EYESHIELD MTG INSTR. FOR GA9, GA10 & GA1	1.000 ea
CN1900A67	MANUAL MOTOR STARTER: NON-REVERSING, 3 P	1.000 ea
CN2005A07	SQUARE-D THERMAL UNIT:20 TRIP CLASS,B10.	3.000 ea
12XN1032A12	SCREW 10-32 X 3/4 HEX HD SLTD	1.000 ea
XY1032A02	10-32 HEX NUT DIRECTIONAL SERRATION	2.000 ea
HW3001B02	BRASS CUP WASHER W/GROUND SYMBOL TAB,	1.000 ea
LB1112	LABEL GRDR STARTER BOX GR	1.000 ea
LB1624	COMBINED WARNING LABEL, ISO/ANSI PICTOGR	1.000 ea
NP3412L	ALUM NP FOR 8" UTILITY GRINDERS-BUFFERS	1.000 ea
G4PA1000	PACKAGING GROUP	1.000 ea
MN903	INSTR MANUAL FOR GRINDERS 9/03	1.000 ea
LB1618	PROPOSITION 65 WARNING LABEL 1-1/2 X 1/2	1.000 ea

Accessories

Part number	Description	Multiplier
GA20	PEDESTAL INDUSTRIAL, CAST IRON 8"-14"	A8
GA9	PAIR LIGHTED EYESHIELDS	A8
GA9-1	SINGLE LIGHTED EYESHIELD	A8
GA9S	PAIR EYESHIELDS W/ ON-OFF SWITCH	A8
GA11	PAIR EYESHIELDS	A8
B125	12" 30 GRIT GRINDING WHEEL	A8
B126	12' 46 GRIT GRINDING WHEEL	A8
DC12	DUST CONTROL UNIT	A8
DC12-3	DUST CONTROL UNIT	A8

G2LY0118

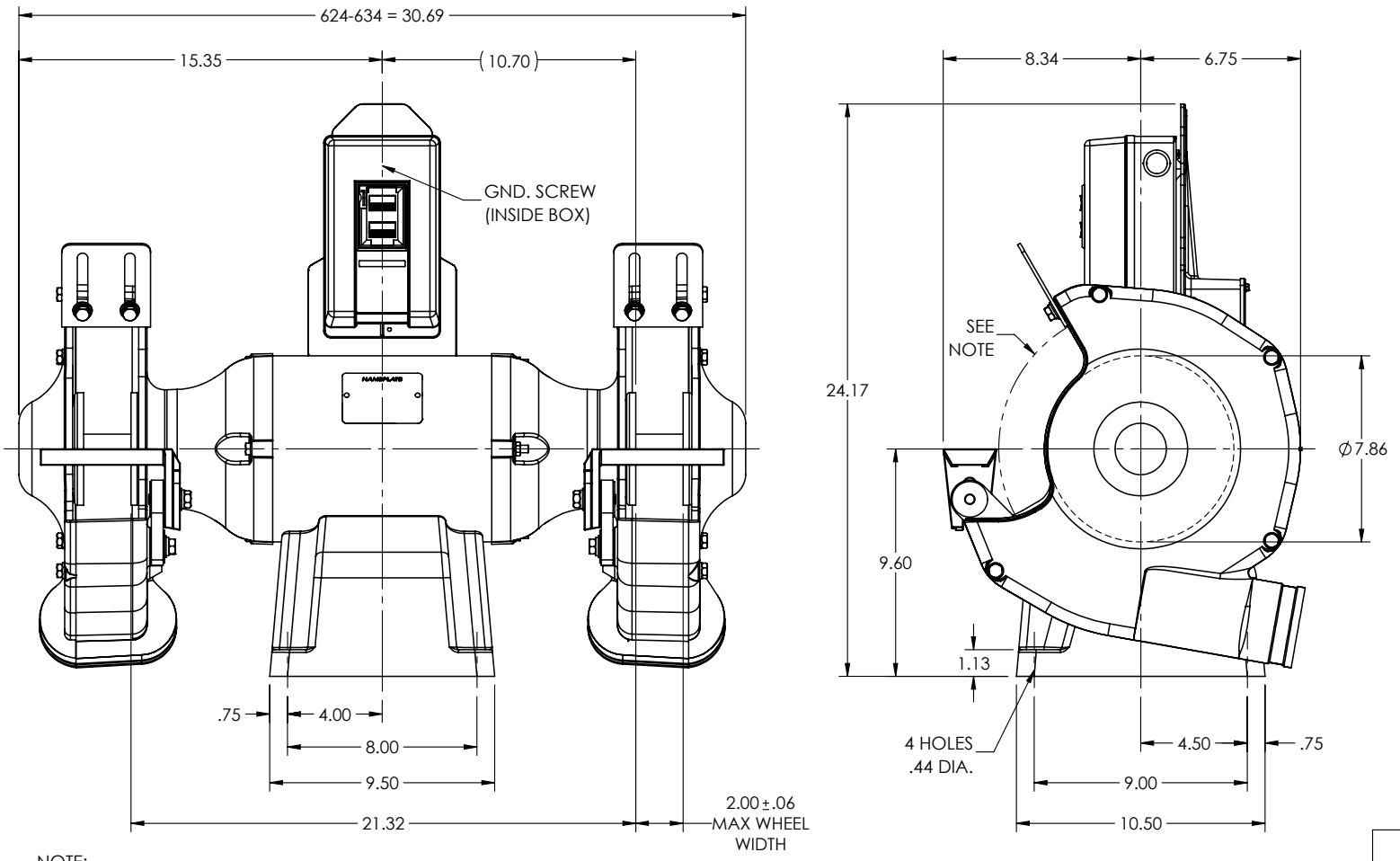

NOTE:
WHEELS SOLD SEPARATELY. SEE CATALOG FOR INFORMATION.

CUSTOMER IS RESPONSIBLE FOR DETERMINING THAT THE PRODUCT WILL PERFORM SUITABLY IN THE INTENDED APPLICATION

REV. DESC: MOVE GROUND SCREW TO TOP OF STARTER			
REV: B	VERSION: 02	REVISED: 01:50:05 10/15/2025	TDR: 000001265308
G2LY0118	MODEL NO. G2LY0118		REF: -
	BY: USEROLI		

BALDOR - RELIANCE®

STD 12" GRINDER 36M FRAME W/EXHAUSTS & MANUAL STARTER

G2LY0118

CD0251

MOTOR

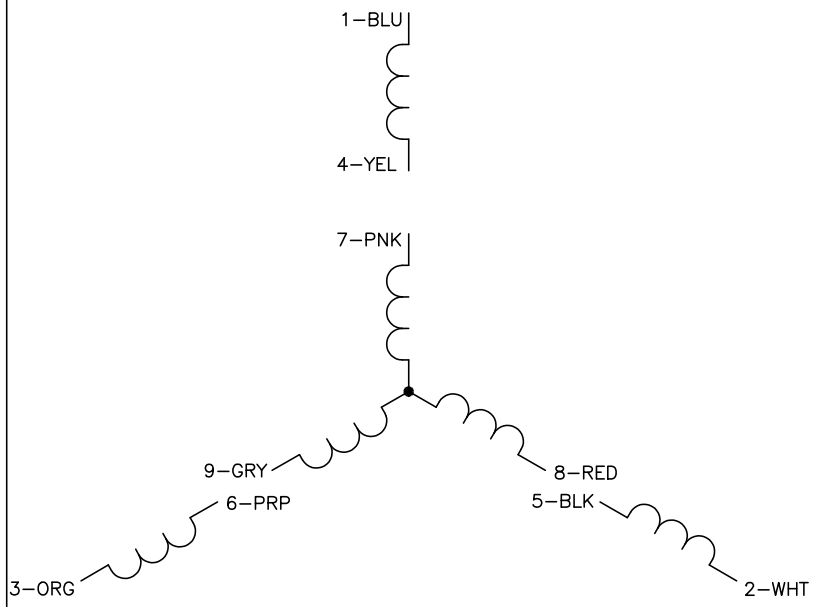

NOTES:

1. GROUND BASE TO BAND.
2. LEAD COLORS ARE OPTIONAL. LEADS MUST ALWAYS BE NUMBERED AS SHOWN.

STARTER BRACKET CONDUIT BOX

HIGH VOLTAGE

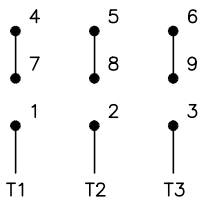

LOW VOLTAGE

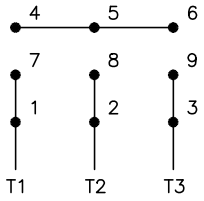

NOTE:

BALDOR LABEL ON STARTER INDICATES FACTORY CONNECTED VOLTAGE. FOR CORRECT OVERLOAD PROTECTION, INSTALL PROPER HEATER ELEMENTS IN STARTER WHEN CHANGING VOLTAGE CONNECTION.

STARTER

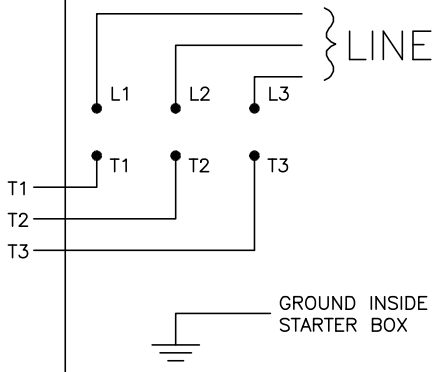

NOTE:

INTERCHANGE ANY TWO LINE LEADS T
REVERSE ROTATION.

CD0251

REV. DESC: REVISE TO SHOW OPTIONAL COLORS			BALDOR ELECTRIC Co.
REV. LTR: C	BY: EAH	REVISED: 05/05/99 10:07	TDR: 0179909
CD0251		FILE: AAA00051265	MDL: –
		MTL: –	3PH, DV, 9 LEAD, GRINDER OR BUFFER W/MANUAL STARTER

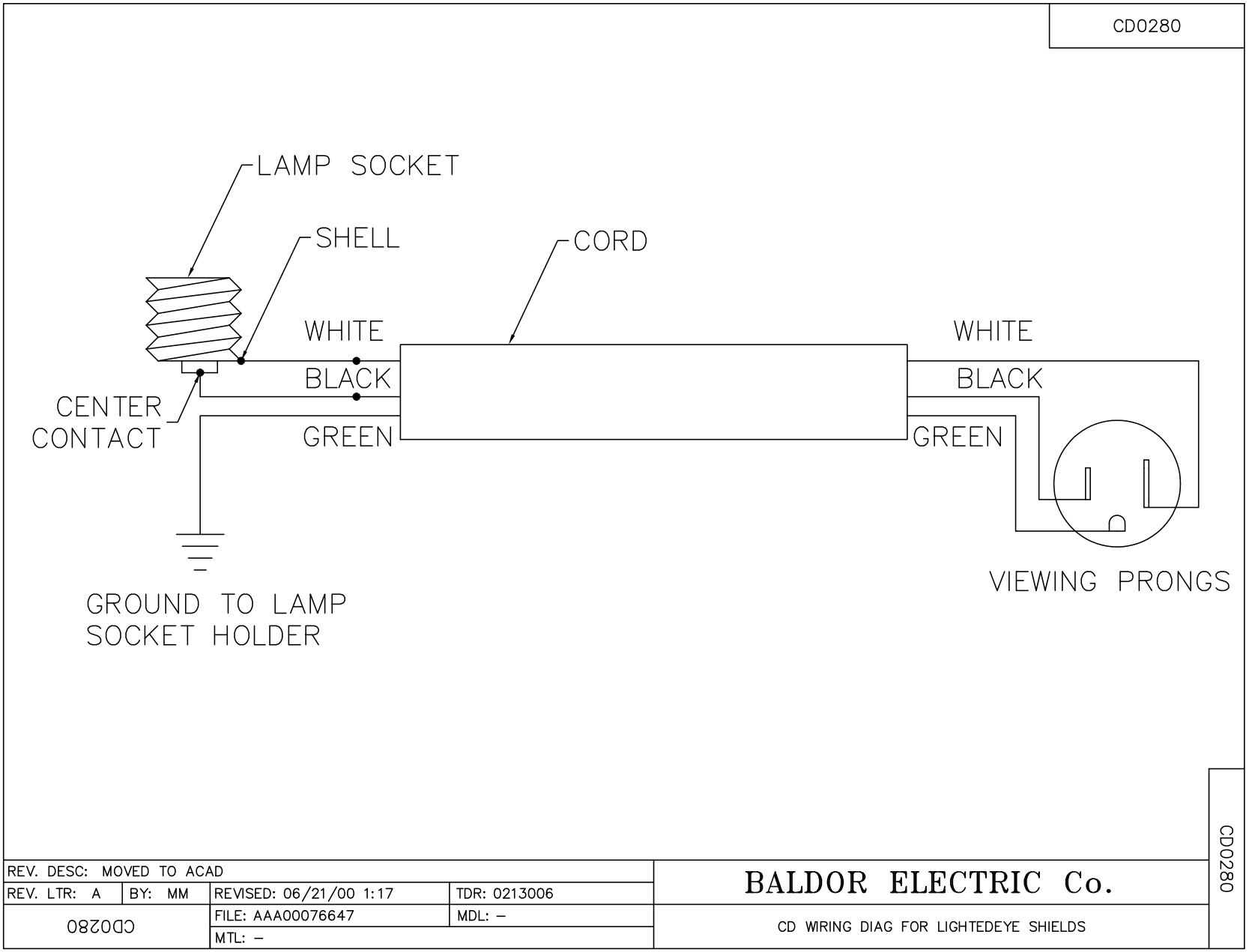
CD0280
LAMP SOCKET
SHELL
CORD
WHITE
BLACK
GREEN
CENTER CONTACT
WHITE
BLACK
GREEN
VIEWING PRONGS
GROUND TO LAMP SOCKET HOLDER
CD0280
REV. DESC: MOVED TO ACAD
REV. LTR: A
BY: MM
REVISED: 06/21/00 1:17
TDR: 0213006
FILE: AAA00076647
MDL: –
MTL: –
CD0280
BALDOR ELECTRIC Co.
CD WIRING DIAG FOR LIGHTEDEYE SHIELDS