ABB BALDOR RELIANCE

Customer information packet

2048-151D

1.5HP, 3600RPM, 1PH, 60HZ, 3528L, 3528L, TEFC

Copyright © All product information within this document is subject to ABB Motors and Mechanical Inc. copyright © protection, unless otherwise noted.
11/24/2026 5:07:48 PM

Specifications

Enclosure	TEFC
Frame	143
Frame Material	Steel
Frequency	60.00 Hz
	60.00 Hz
Motor Letter Type	Cap Start, Induction Run
Number of Poles	2
	2
Output @ Frequency	1.500 HP @ 60 HZ
Phase	1
	1
Product Style	BELT SANDER
Speed	3450 rpm
	3450 rpm
Synchronous Speed @ Frequency	3600 RPM @ 60 HZ
Voltage	115 V
	230 V
Voltage @ Frequency	230.0 V @ 60 HZ
	115.0 V @ 60 HZ
Agency Approvals	UR
Ambient Temperature	40 °C
Base Indicator	Rigid
Bearing Grease Type	Polyrex EM (-20F +300F)
Current @ Voltage	15.000 A @ 115.0 V
	7.500 A @ 230.0 V
Design Code	L
Duty Rating	CONT
Efficiency @ 100% Load	70.0 %
Feedback Device	NO FEEDBACK
Insulation Class	B
KVA Code	H
Motor Lead Quantity/Wire Size	4 @ 16 AWG

Part Detail

Revision	AV
Type	AC
Mech. spec.	B2-3
Base	
Status	PRD/A
Elec. spec.	35WGW811
Layout	B2LY0003
Eff. date	12-15-2021
CD Diagram	CD0093
Poles	02
Leads	4#16
Proprietary	False
Created date	01-01-0001

Motor Standards	NEMA
Motor Type	3528L
Mounting Arrangement	F1
Overall Length	16.62 IN
Power Factor	82
Product Family	Belt Sander
Service Factor	1.00
Shaft Extension Location	Pulley End
Shaft Rotation	Fixed Opposite Standard
Shaft Slinger Indicator	No Slinger
Speed Code	Single Speed
Starting Method	Direct on line
Thermal Device - Winding	None
Winding Thermal 1	None
Winding Thermal 2	None

Nameplate

NP3118			
CAT.NO.	2048-151D		
HP	1.5	**VOLTS**	115/230
PHASE	1	**AMPS**	15/7.5
HZ	60	**RPM**	3600
SER.NO			
SPEC.	B2-3A		

Parts List

Part number	Description	Quantity
HA6218A02	MOUNTING BRACKET	1.000 ea
91XN3816A16	3/8-16X1 HEX SOC CNTRSK	4.000 ea
HA6068A02	BRACKET, TOOL REST MACH	1.000 ea
10XN3118A14	5/16-18 X 7/8 HEX HEAD CAP	1.000 ea
35H713W811	1.5HP,3600RPM,1PH,60HZ,56CYZ,3528L,TEFC	1.000 ea
LB1008	LABEL, UL	1.000 ea
LB1014	WARNING LABEL, FOR BELT GRINDERS	1.000 ea
LB1624	COMBINED WARNING LABEL, ISO/ANSI PICTOGR	1.000 ea
LB5003A01	TAG, CONNECTION	1.000 ea
B2PA1001	PACKAGING GROUP	1.000 ea
LC0279A01	1PH, DV, FIX, GRINDER, CONN FOR LV	1.000 ea
LB1618	PROPOSITION 65 WARNING LABEL 1-1/2 X 1/2	1.000 ea
HW1000A31	5/16 SAE FL WSHR NARROW, ID=.344, OD=.62	1.000 ea
HW1001A31	LOCKWASHER 5/16, ZINC PLT.591 OD, .319 I	1.000 ea
G8AP1003A01SP	TOOL REST	1.000 ea
10XN3816A24	3/8-16 X 1 1/2 HEX HD CAP SCREW	1.000 ea
HW1001A38	LOCKWASHER 3/8, ZINC PLT .688 OD, .382 I	1.000 ea
XY3816A12	3/8-16 FINISHED NUT W/SERRATIONS	1.000 ea
HW1000A38	WASHER, 3/8" FLAT, SAE Z/P	2.000 ea
B2AP1005A02	PLATEN FOR BELT GRINDER WELKER	1.000 ea
12XN0832A08	8-32 X 1/2 HEX HD	2.000 ea
HW1001A08	WASHER, #8 SPLT LK, ZN	2.000 ea
B2FH2806A01SP	CONTACT WHEEL GUARD	1.000 ea
HA6225	SPACER (WELKER)	2.000 ea
10XN2520A26	1/4-20X 1 5/8 HEX HD	2.000 ea
HW1001A25	LOCKWASHER 1/4, ZINC PLT .493 OD, .255 I	2.000 ea
B2AP5002A01	TRACK ARM & SHAFT ASSY	1.000 ea
B2FH2801A01SP	GRINDER GUARD, MACH	1.000 ea
10XN2520A12	1/4-20 X 3/4 HEX HEAD CAP	2.000 ea
HW1001A25	LOCKWASHER 1/4, ZINC PLT .493 OD, .255 I	2.000 ea
HW1000A25	1/4 SAE FLAT WASHER (FS)	2.000 ea

B2AP3003A01SP	IDLER WHEEL -- BELT GRINDER	1.000 ea
HW5000A51	N5000-156 RETAINER RING (F/S)	2.000 ea
BG6203E03	6203 D.SL,C3,POLYREX EM	2.000 ea
HW5010A32	RET RING 5100-66 (WALDES)	1.000 ea
B2AP1000A01	LATCH, IDLER ARM -- MACH	1.000 ea
HA7001A01	TORSION SPRING,4.5" FREE-LENGTH, .855 I.	1.000 ea
HA7002A01	TORSION SPRING, .843 FREELENGTH, .437 I.	1.000 ea
MN902	MANUAL FOR BELT GRINDERS	1.000 ea
10XN3816A20	3/8-16X1 1/4 HEX HD CAP	1.000 ea
80XN2520J06	1/4-20 X 3/8 SET SCREW, HEX SOC, CUP PT	1.000 ea
HA5000A01	KNOB AND STUD ASSY	1.000 ea
B2AP5001A01SP	CONTACT WHEEL ASSY WITH RUBBER THREAD	1.000 ea
HW1000A75	WASHER, 3/4 FLAT, ZN	2.000 ea
XY7510A12SP	3/4-10 NUT R.H. HEX (NC) ZINC PLATED	1.000 ea
AB248	ABRASIVE BELT, 2" X 48", 80 GRIT,CERAMIC	1.000 ea
B2FH2810A01SP	GUARD (HALF) MACHINED, USE W/B2FH2811A01	1.000 ea
B2FH2811A01	GUARD (HALF) MACHINED, USE W/B2FH2810A01	1.000 ea
51XN1032A12	10-32 X 0.750 HX WS SL SR	3.000 ea
HW1023A10	WASHER,#10 INT/EX TH LK, ZN X TDR#2	3.000 ea
XY1032A02	10-32 HEX NUT DIRECTIONAL SERRATION	3.000 ea
93XN1032A12	10-32X3/4 SHOULDER/TYPE T TDR 1	2.000 ea
HW1003A10	WASHER, #10 EX TH LK, ZN X	2.000 ea
B2FH2808A01SP	GUARD COVER, MACH	1.000 ea
93XN1032A12	10-32X3/4 SHOULDER/TYPE T TDR 1	2.000 ea
HW1003A10	WASHER, #10 EX TH LK, ZN X	2.000 ea
B2FH2809A01SP	GUARD COVER, MACH	1.000 ea
93XN1032A08	10-32X1/2 SHOULDER/TYPE T	1.000 ea
HW1003A10	WASHER, #10 EX TH LK, ZN X	1.000 ea
MG1000G01	MUNSELL 5.93PB 3.81/ 2.71	0.017 ga

Accessories

Part number	Description	Multiplier
GA16	PEDESTAL INDUSTRIAL, CAST IRON 6" - 10"	A8
GA14	PEDESTAL FABRICATED STEEL W/SHELVES	A8
GA20	PEDESTAL INDUSTRIAL, CAST IRON 8"-14"	A8
GA20E	PEDESTAL LIGHT INDUSTRIAL,STEEL	A8
AB248	2' X 48" 80 GRIT GRINDER BELT	A8
BQ1-015-CC	1PH Brake, NEMA 1,110-125 VAC, 50/60Hz	P1
BQ1-015-CP	1PH Brake, Panel 110-125 VAC, 50/60 Hz	
BQ2-015-CC	1PH Brake,NEMA 1 208-230 VAC,50/60Hz	
BQ2-015-CP	1PH Brake, Panel 208-230 VAC, 50/60 Hz	

AC Induction Motor Performance Data
Record # 9881
Typical performance - not guaranteed values

Winding: 35WGW811-R001	**Type:** 3528L	**Enclosure:** TEFC

Nameplate Data				**230 V, 60 Hz: High Voltage Connection**	
Rated Output (HP)			1.5	**Full Load Torque**	2.3 LB-FT
Volts			115/230	**Start Configuration**	direct on line
Full Load Amps			15/7.5	**Breakdown Torque**	5.6 LB-FT
R.P.M.			3450	**Pull-up Torque**	5.2 LB-FT
Hz	60	**Phase**	1	**Locked-rotor Torque**	5.5 LB-FT
NEMA Design Code	L	**KVA Code**	H	**Starting Current**	42 A
Service Factor (S.F.)			1	**No-load Current**	4.5 A
NEMA Nom. Eff.	70	**Power Factor**	82	**Line-line Res. @ 25ºC**	1.26 Ω A Ph 1.23 Ω B Ph
Rating - Duty			40C AMB-CONT	**Temp. Rise @ Rated Load**	70°C
S.F. Amps				**Temp. Rise @ S.F. Load**	84°C

Load Characteristics 230 V, 60 Hz, 1.5 HP

% of Rated Load	**25**	**50**	**75**	**100**	**125**	**150**	**S.F.**
Power Factor	47	64	73	80	84	86	82
Efficiency	51.9	65.3	68.4	71.2	70.6	68.4	70.8
Speed	3567	3541	3514	3475	3439	3397	3453
Line amperes	5	5.8	6.9	8.6	10.2	12.1	9.6

ABB Motors and Mechanical Inc.

WINDING # 35WGW811

1.5 HP 1 PH 60 HZ 3450 RPM 230 V 3528L

Typical performance - not guaranteed values.

TORQUES(LB-FT): PO=5.6 PU=5.2 LR=5.5 LRA=42

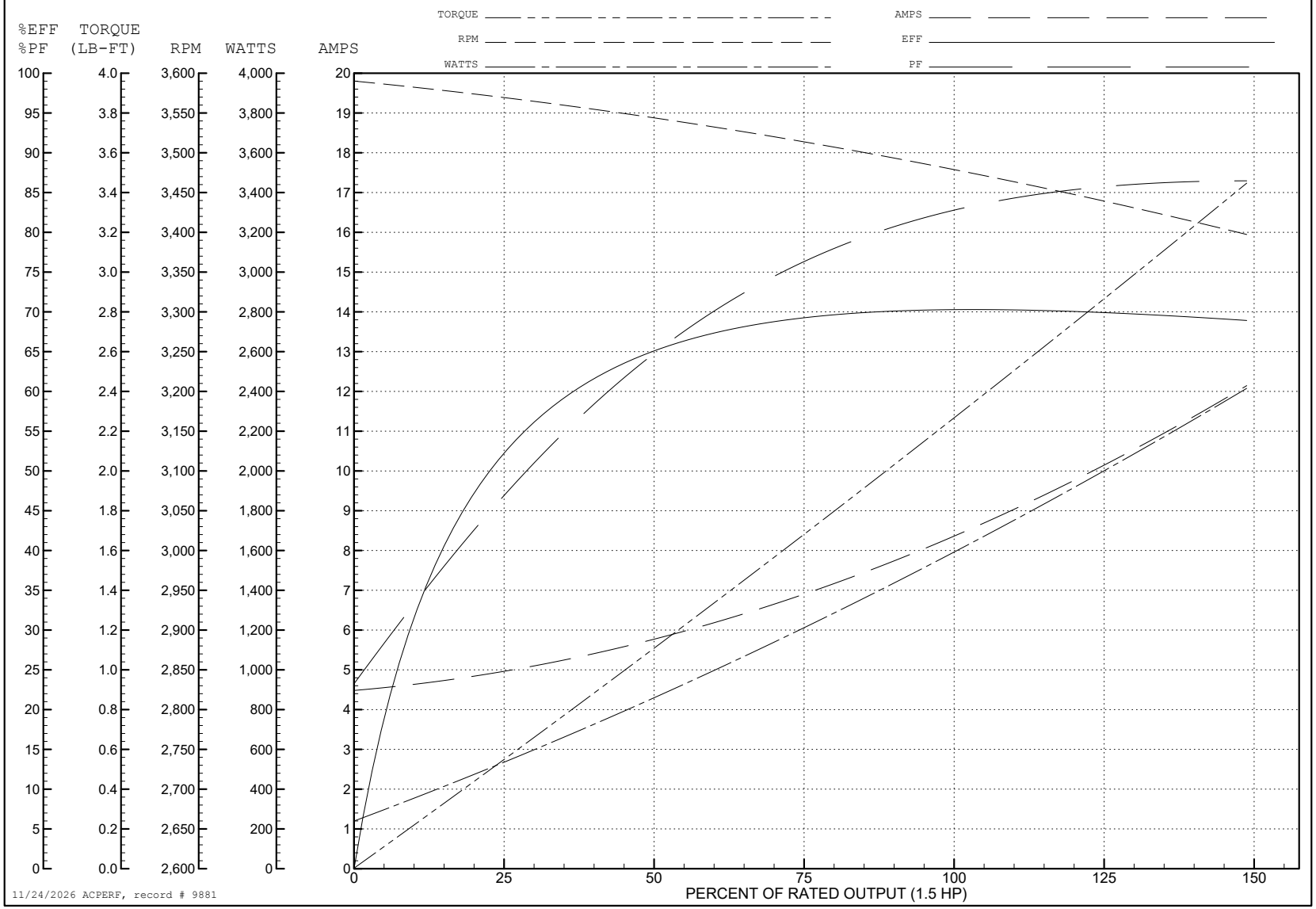

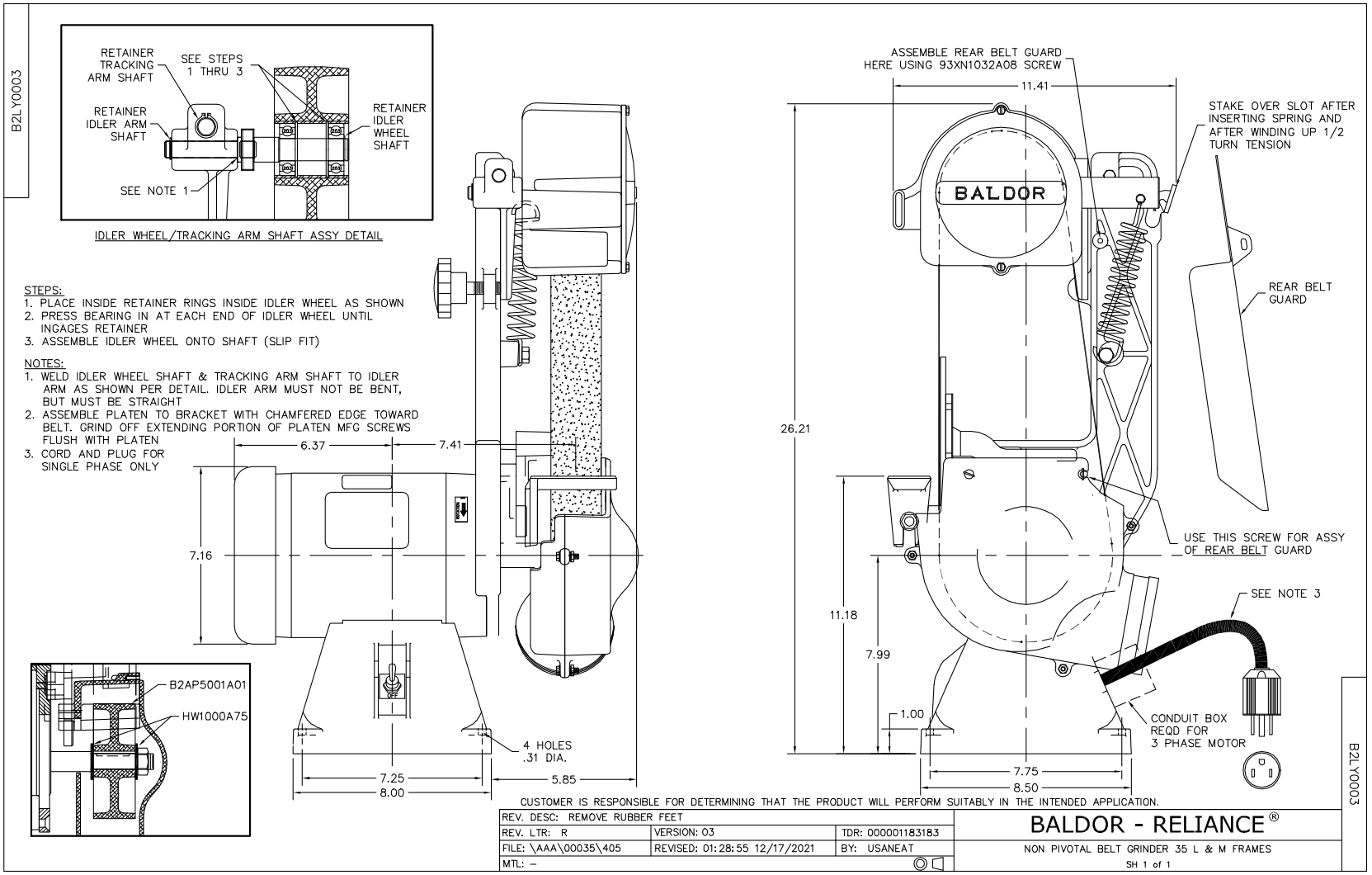
B2LY0003
RETAINER TRACKING ARM SHAFT
SEE STEPS 1 THRU 3
RETAINER IDLER ARM SHAFT
RETAINER IDLER WHEEL SHAFT
SEE NOTE 1
IDLER WHEEL/TRACKING ARM SHAFT ASSY DETAIL
STEPS:
1. PLACE INSIDE RETAINER RINGS INSIDE IDLER WHEEL AS SHOWN
2. PRESS BEARING IN AT EACH END OF IDLER WHEEL UNTIL INGAGES RETAINER
3. ASSEMBLE IDLER WHEEL ONTO SHAFT (SLIP FIT)
NOTES:
1. WELD IDLER WHEEL SHAFT & TRACKING ARM SHAFT TO IDLER ARM AS SHOWN PER DETAIL. IDLER ARM MUST NOT BE BENT, BUT MUST BE STRAIGHT
2. ASSEMBLE PLATEN TO BRACKET WITH CHAMFERED EDGE TOWARD BELT. GRIND OFF EXTENDING PORTION OF PLATEN MFG SCREWS FLUSH WITH PLATEN
3. CORD AND PLUG FOR SINGLE PHASE ONLY
6.37
7.41
7.16
4 HOLES .31 DIA.
7.25
8.00
5.85
B2AP5001A01
HW1000A75
ASSEMBLE REAR BELT GUARD HERE USING 93XN1032A08 SCREW
11.41
STAKE OVER SLOT AFTER INSERTING SPRING AND AFTER WINDING UP 1/2 TURN TENSION
BALDOR
REAR BELT GUARD
26.21
USE THIS SCREW FOR ASSY OF REAR BELT GUARD
SEE NOTE 3
11.18
7.99
1.00
CONDUIT BOX REQD FOR 3 PHASE MOTOR
7.75
8.50
B2LY0003
CUSTOMER IS RESPONSIBLE FOR DETERMINING THAT THE PRODUCT WILL PERFORM SUITABLY IN THE INTENDED APPLICATION.
REV. DESC: REMOVE RUBBER FEET
REV. LTR: R
VERSION: 03
TDR: 000001183183
FILE: \AAA\00035\405
REVISED: 01:28:55 12/17/2021
BY: USANEAT
MTL: –
BALDOR - RELIANCE®
NON PIVOTAL BELT GRINDER 35 L & M FRAMES
SH 1 of 1

35LYH713

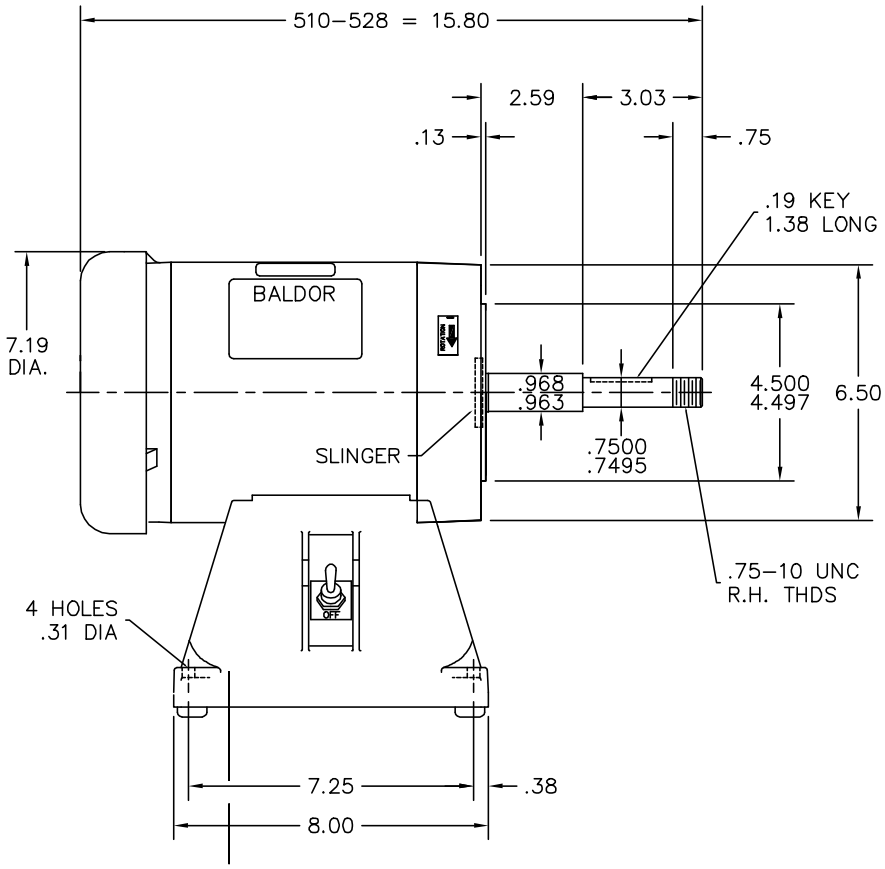

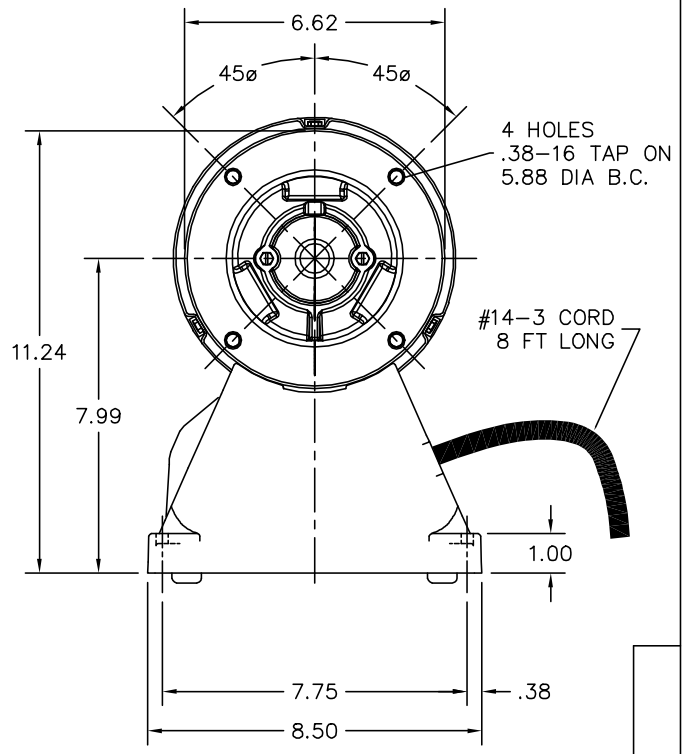

CUSTOMER IS RESPONSIBLE FOR DETERMINING THAT BALDOR'S PRODUCT WILL PERFORM SUITABLY IN THE INTENDED APPLICATION.

REV. DESC: REPLACE ENDPLATES		
REV. LTR: T	VERSION: 02	TDR: 000001063223
FILE: \AAA\00035\477	REVISED: 08:50:58 03/07/2018	BY: FGCHAH1
MTL: –		

BALDOR

56CZ TEFC 35L FOR B2–3 NON–PIVOTAL BELT GRINDER

SH 1 of 1

35LYH713

CD0093

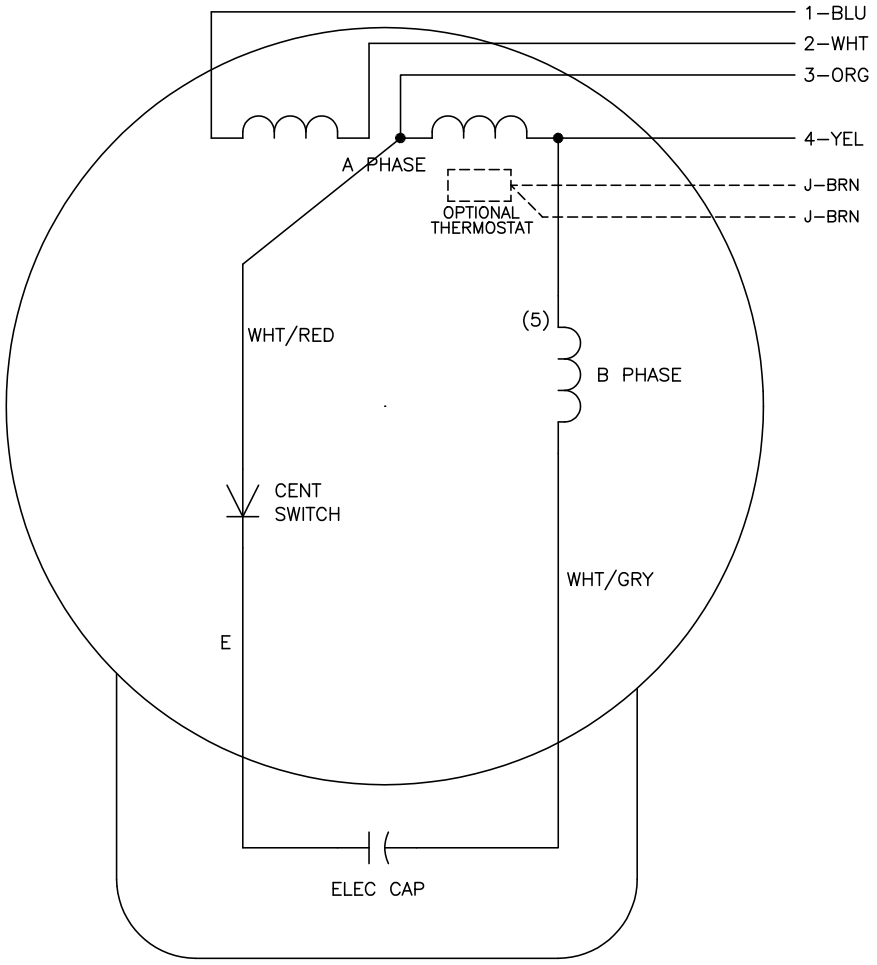

	LINE A	LINE B	JOIN
HIGH	1	4	2,3
LOW	1,3	2,4	–

NOTES:

1. CONNECTIONS ARE SHOWN FOR CCW ROTATION FACING END OPPOSITE SHAFT EXTENSION (STD). FOR CW ROTATION, INTERCHANGE 5 AND 8 INTERNALLY.
2. OPTIONAL THERMOSTAT IS PROVIDED WHEN SPECIFIED.
3. MULTIPLE CAPACITORS ARE CONNECTED IN PARALLEL UNLESS OTHERWISE SPECIFIED.
4. LEAD COLORS ARE OPTIONAL. LEADS MUST ALWAYS BE NUMBERED AS SHOWN.

REV. DESC: REVISE TO SHOW OPTIONAL COLORS			BALDOR ELECTRIC Co.
REV. LTR: F	BY: JLP	REVISED: 04/08/99 3:51	TDR: 0178636
CD0093		FILE: AAA00007475	MDL: –
		MTL: –	TYPE L, DV, FIX, 4 LEADS

CD0093