ABB BALDOR RELIANCE

Customer information packet

7307D

.5HP, 3600RPM, 1PH, 60HZ, 3420C, GRND

Copyright © All product information within this document is subject to ABB Motors and Mechanical Inc. copyright © protection, unless otherwise noted.
11/26/2026 7:56:16 AM

Specifications

Enclosure	GRND
Frame Material	Steel
Frequency	60.00 Hz
	60.00 Hz
Motor Letter Type	Oil Capacitor Start and Run
Nameplate Output	.5
Number of Poles	2
	2
Output @ Frequency	.500 HP @ 60 HZ
Phase	1
	1
Product Style	GRINDER
Speed	3600 rpm
	3600 rpm
Synchronous Speed @ Frequency	3600 RPM @ 60 HZ
Voltage	115 V
	230 V
Voltage @ Frequency	230.0 V @ 60 HZ
	115.0 V @ 60 HZ
Agency Approvals	UR
Ambient Temperature	40 °C
Base Indicator	Rigid
Bearing Grease Type	Polyrex EM (-20F +300F)
Current @ Voltage	1.700 A @ 230.0 V
	3.400 A @ 115.0 V
Duty Rating	CONT
Feedback Device	NO FEEDBACK
Heater Indicator	No Heater
Insulation Class	B
KVA Code	-
Motor Lead Quantity/Wire Size	4 @ 18 AWG
Motor Standards	Other

Part Detail

Revision	BA
Type	AC
Mech. spec.	G7-0307
Base	
Status	PRD/A
Elec. spec.	G7WG0030
Layout	G7LY0307
Eff. date	06-23-2023
CD Diagram	CD0279
Poles	02
Leads	4#18
Proprietary	False
Created date	01-01-0001

Motor Type	3420C
Mounting Arrangement	F1
Overall Length	20.89 IN
Product Family	Grinder
Service Factor	1.00
Shaft Extension Location	Double Shaft
Shaft Rotation	Fixed Opposite Standard
Shaft Slinger Indicator	No Slinger
Speed Code	Single Speed
Starting Method	Direct on line
Thermal Device - Winding	None

Nameplate

NP3118			
CAT.NO.	7307D		
HP	.5	**VOLTS**	115/230
PHASE	1	**AMPS**	3.4/1.7
HZ	60	**RPM**	3600
SER.NO			
SPEC.	G7-307-30		

Parts List

Part number	Description	Quantity
SA004986	SA G7-307-30	1.000 ea
RA002336	RA G7-307-30	1.000 ea
OC3006F12	CYL OIL CAP 6MFD/370V	1.000 ea
WD4102A01	SR-6L-1 HEYCO STRN RELIEF OR 23MPO6L10 M	1.000 ea
LD5001A07	CORD & PLUG ASSY 18-3 SJT .33 DIA. 10 AM	1.000 ea
WD1000A16	2-520128-2 AMP FLAG TERMINAL(4M/RL)	2.000 ea
SP9000SP	80600BJ A-H OR 1520237-2 TYCO;2PST,125/2	1.000 ea
HW1003A50	LOCKWASHER,1/2",EXT.TOOTHZINC PLATED	1.000 ea
WD1000A16	2-520128-2 AMP FLAG TERMINAL(4M/RL)	3.000 ea
G7CB4500	BASE COVER PLATE 7" GRINDER	1.000 ea
51XW1032A06	10-32 X .38, TAPTITE II, HEX WSHR SLTD S	2.000 ea
RM1005A01SP	BUMPER- #2089 (R-R CO)	4.000 ea
11XW1032G06	10-32 X .38, TAPTITE II, HEX WSHR SLTD U	1.000 ea
G7EP3900A01	ENDPLATE, MACH	1.000 ea
HW5100A03	WAVY WASHER (W1543-017)	2.000 ea
G7EP3900A01	ENDPLATE, MACH	1.000 ea
XY1032A02	10-32 HEX NUT DIRECTIONAL SERRATION	4.000 ea
G7FH1800A01GSP	GRINDER GUARD, MACH	1.000 ea
G7FH1801A01	GRINDER GUARD COVER, MACH	1.000 ea
10XF2520A16	SCREW, HEX HD, ZN	3.000 ea
10XN2520A16	1/4-20 X 1 HEX HEAD CAP SCR, ZINC PLATED	4.000 ea
HA6096A01SP	WHEEL FLANGE, MACH	4.000 ea
HA2040A01SP	SPACER,CRST(WELKER#824500	2.000 ea
HW3021C04	SPRG PIN 3/32 DIA .375LGH DRIV-LOK	2.000 ea
G7AP3000A02	WHEEL, 7 X 1 X 60 GRIT B74 X	1.000 ea
G7AP3000A01	WHEEL, 7 X 1 X 36 GRIT B73 X	1.000 ea
XY6311A12SP	HEX NUT 5/8-11	1.000 ea
XY6311A62	5/8-11 NUT L.H. HEX (NC)X (F/S)	1.000 ea
G7FH1802A01GSP	GRINDER GUARD, MACH	1.000 ea
G7FH1803A01GSP	GRINDER GUARD COVER, MACH	1.000 ea
10XF2520A16	SCREW, HEX HD, ZN	3.000 ea

10XN2520A16	1/4-20 X 1 HEX HEAD CAP SCR, ZINC PLATED	4.000 ea
G6AP1008A01SP	TOOLREST, MACH/PRIMED	1.000 ea
HA6064A01SP	PAINT/PRIME HA6064A01	1.000 ea
10XN2520A14	1/4 20X7/8 HX HD CAP	2.000 ea
HW1001A25	LOCKWASHER 1/4, ZINC PLT .493 OD, .255 I	2.000 ea
HW1000A25	1/4 SAE FLAT WASHER (FS)	2.000 ea
G6AP1008A01SP	TOOLREST, MACH/PRIMED	1.000 ea
HA6064A01SP	PAINT/PRIME HA6064A01	1.000 ea
10XN2520A14	1/4 20X7/8 HX HD CAP	2.000 ea
HW1001A25	LOCKWASHER 1/4, ZINC PLT .493 OD, .255 I	2.000 ea
HW1000A25	1/4 SAE FLAT WASHER (FS)	2.000 ea
G6AP1002A01	SPARK BREAKER-6",7" & 8" GRINDERS	2.000 ea
10XN3118A10	5/16-18 X 5/8 HEX HEAD CAP	2.000 ea
HW1000A31	5/16 SAE FL WSHR NARROW, ID=.344, OD=.62	2.000 ea
HA3205A50	U550-N SWITCH NUT/CARLING	1.000 ea
HW1001A31	LOCKWASHER 5/16, ZINC PLT.591 OD, .319 I	2.000 ea
HA6053A01ZP	CLAMP, CAPACITOR 2" DIA, WHITE ZINC PLAT	1.000 ea
51XN1032A07	10-32 X 0.438 HX WS SL SR ZN	2.000 ea
XY1032A02	10-32 HEX NUT DIRECTIONAL SERRATION	2.000 ea
10XN2520A16	1/4-20 X 1 HEX HEAD CAP SCR, ZINC PLATED	2.000 ea
HW1001A25	LOCKWASHER 1/4, ZINC PLT .493 OD, .255 I	2.000 ea
HA6103A01	SUPPORT ARM, EYESHIELD (PLATED)	2.000 ea
HA6094A01SP	CLAMP FOR SUPPORT ARM X PLATED	2.000 ea
WD4102A01	SR-6L-1 HEYCO STRN RELIEF OR 23MPO6L10 M	2.000 ea
G7AP5006A01	G7-253(GA9-2)EYESHIELD KIT (QTY 2)	1.000 ea
GA24	WATER POT ASSY	1.000 ea
GA25	TOOL TRAY ASSY	1.000 ea
MG1000G01	MUNSELL 5.93PB 3.81/ 2.71	0.014 ga
85XU0407S04	4X1/4 U DRIVE PIN STAINLESS	2.000 ea
WD4006B01	TYPE O/B+ 3M SCOTCHLOK WIRE CONNECTOR	4.000 ea
HA3100A29	THRUBOLT 10-32 X 7.00	4.000 ea
LB1008	LABEL, UL	1.000 ea
LB1009N	LABEL,ROTATION DIRECTION (ON ROLLS)	1.000 ea
LB1030	LABEL, OSHA (ON ROLLS)	1.000 ea

LB1307	LABEL, WARNING	1.000 ea
LB1624	COMBINED WARNING LABEL, ISO/ANSI PICTOGR	1.000 ea
MN903	INSTR MANUAL FOR GRINDERS 9/03	1.000 ea
LC0279A01	1PH, DV, FIX, GRINDER, CONN FOR LV	1.000 ea
NP3118	ALUM GRINDERS-BUFFERS NO LOGO'S	1.000 ea
07PA1005	PKG GRP, PRINT PK1156A07	1.000 ea
LB1618	PROPOSITION 65 WARNING LABEL 1-1/2 X 1/2	1.000 ea

Accessories

Part number	Description	Multiplier
GA16E	PEDESTAL LIGHT INDUSTRIAL,STEEL	A8
GA16	PEDESTAL INDUSTRIAL, CAST IRON 6" - 10"	A8
GA14	PEDESTAL FABRICATED STEEL W/SHELVES	A8
B73	7" 36 GRIT GRINDING WHEEL	A8
B74	7" 60 GRIT GRINDING WHEEL	A8
GA9	PAIR LIGHTED EYESHIELDS	A8
GA9-1	SINGLE LIGHTED EYESHIELD	A8
GA9S	PAIR EYESHIELDS W/ ON-OFF SWITCH	A8
GA11	PAIR EYESHIELDS	A8
BQ1-015-CC	1PH Brake, NEMA 1,110-125 VAC, 50/60Hz	P1
BQ1-015-CP	1PH Brake, Panel 110-125 VAC, 50/60 Hz	
DC7	DUST CONTROL UNIT	A8

G7LY0307

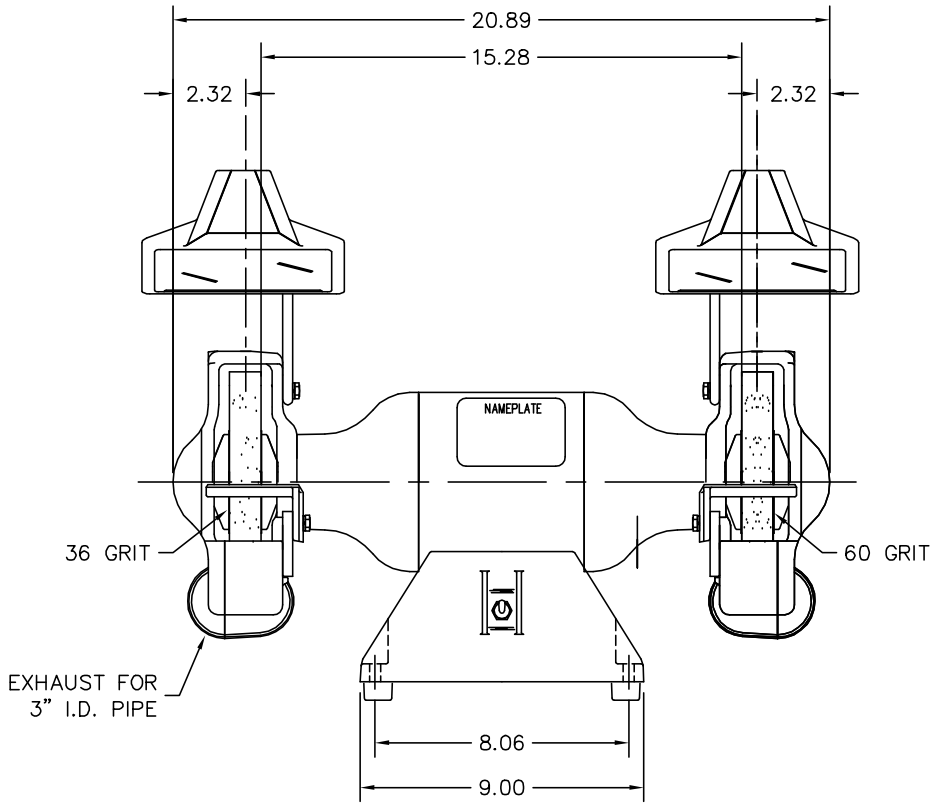

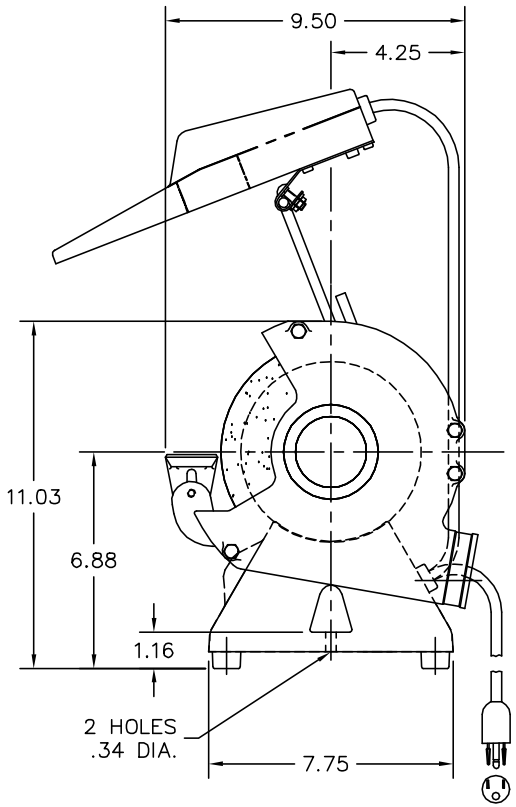

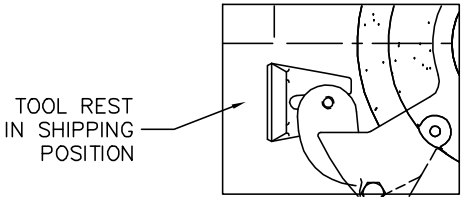

CUSTOMER IS RESPONSIBLE FOR DETERMINING THAT BALDOR'S PRODUCT WILL PERFORM SUITABLY IN THE INTENDED APPLICATION.

REV. DESC: SHOW LIGHTED EYESHIELD		
REV. LTR: K	VERSION: 02	TDR: 000000846441
FILE: \AAA\00046\129	REVISED: 04:24:58 03/31/2014	BY: ENVINWO
MTL: –		

BALDOR

STD. 7" DELUXE GRINDER TYPE C 115V

SH 1 of 1

G7LY0307

CD0279

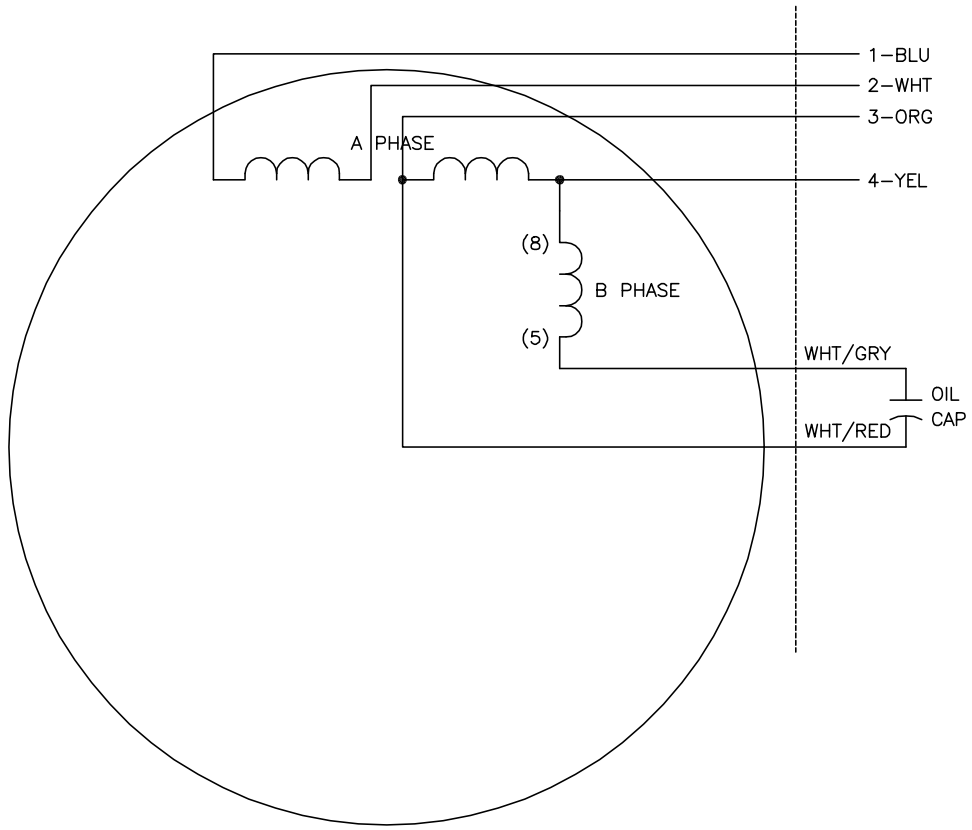

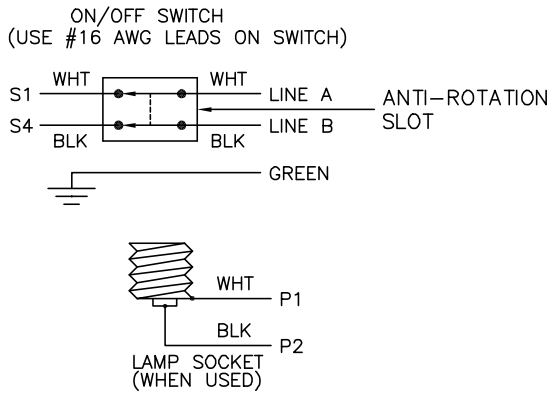

	S1	S4	JOIN
HIGH	1,P1	4	2,3,P2
LOW	1,3,P1	2,4,P2	–

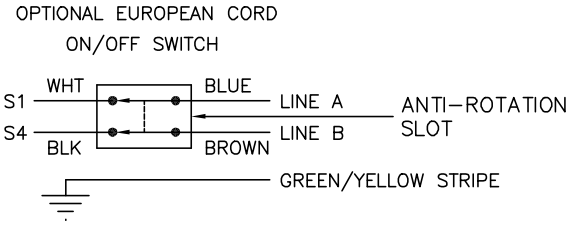

NOTES:

1. CONNECTIONS ARE SHOWN FOR CW ROTATION FACING END OPPOSITE SHAFT EXTENSION (OPP STD). FOR CCW ROTATION, INTERCHANGE (5) AND (8) INTERNALLY.
2. LEAD COLORS ARE OPTIONAL. LEADS MUST ALWAYS BE NUMBERED AS SHOWN.

REV. DESC: ADDED ANTI–ROTATION DETAIL TO RH SIDE OF SWITCH		
REV. LTR: E	VERSION: 01	TDR: 000000863536
FILE: \AAA\00028\193	REVISED: 09:52:27 07/23/2014	BY: ENCHALO
MTL: –		

BALDOR

TYPE C, DV, FIX, OPT. LIGHTED EYESHIELD, GRINDER

SH 1 of 1

CD0279