ABB BALDOR RELIANCE

Customer information packet

CEWDM3554T

1.5HP, 1770RPM, 3PH, 60HZ, 145TC, 3530M, TENV
Class - None
Division - Not Applicable

Copyright © All product information within this document is subject to ABB Motors and Mechanical Inc. copyright © protection, unless otherwise noted.
11/23/2026 2:23:43 AM

Specifications

Enclosure	TENV
Frame	145TC
Frame Material	Steel
Frequency	60.00 Hz
Haz Area Class and Group	None
Haz Area Division	Not Applicable
Motor Letter Type	Three Phase
Output @ Frequency	1.500 HP @ 60 HZ
Phase	3
Synchronous Speed @ Frequency	1800 RPM @ 60 HZ
Voltage @ Frequency	230.0 V @ 60 HZ
	460.0 V @ 60 HZ
Agency Approvals	NEMA PREMIUM
	NEMA_PREMIUM
	UR
	CSA EEV
Ambient Temperature	40 °C
Auxiliary Box	NO AUXILLARY BOX
Auxiliary Box Lead Termination	None
Base Indicator	Rigid
Bearing Grease Type	Polyrex EM (-20F +300F)
Blower	None
Current @ Voltage	2.300 A @ 460.0 V
	4.600 A @ 230.0 V
Design Code	B
Drip Cover	No Drip Cover
Duty Rating	CONT
Efficiency @ 100% Load	86.5 %
Electrically Isolated Bearing	Not Electrically Isolated
Feedback Device	NO FEEDBACK
Front Shaft Indicator	None
Heater Indicator	No Heater

Part Detail

Revision	E
Type	AC
Mech. spec.	35SS592
Base	
Status	PRD/A
Elec. spec.	35WGG178
Layout	35LYSS592
Eff. date	02-14-2024
CD Diagram	CD0005
Poles	04
Leads	9#18
Proprietary	False
Created date	10-01-2021

High Voltage Full Load Amps	2.3 a
Insulation Class	H
Inverter Code	Inverter Duty
KVA Code	M
Lifting Lugs	No Lifting Lugs
Locked Bearing Indicator	Locked Bearing
Motor Lead Quantity/Wire Size	9 @ 18 AWG
Motor Lead Termination	Flying Leads
Motor Standards	NEMA
Motor Type	3530M
Mounting Arrangement	F1
Number of Poles	4
Overall Length	13.00 IN
Power Factor	72
Product Family	Wash Down
Pulley End Bearing Type	Sealed Bearing
Pulley Face Code	C-Face
Pulley Shaft Indicator	Standard
Rodent Screen	None
Service Factor	1.00
Shaft Diameter	0.875 IN
Shaft Ground Indicator	No Shaft Grounding
Shaft Rotation	Reversible
Shaft Slinger Indicator	Shaft Slinger
Speed	1770 rpm
Speed Code	Single Speed
Starting Method	Direct on line
Thermal Device - Bearing	None
Thermal Device - Winding	None
Vibration Sensor Indicator	No Vibration Sensor
Winding Thermal 1	None
Winding Thermal 2	None

Nameplate

NP1669L											
CAT.NO.	CEWDM3554T										
SPEC.	35SS592G178G1										
HP	1.5										
VOLTS	230/460										
AMP	4.6/2.3										
RPM	1770										
FRAME	145TC		**HZ**	60			**PH**	3			
SER.F.	1.00	**CODE**	M	**DES**	B	**CLASS**	H				
NEMA-NOM-EFF	86.5	**PF**	72								
RATING	40C AMB-CONT										
CC	010A										
DE	6205		**ODE**	6203							
ENCL	TENV	**SN**									
BLANK	20:1CT, 20:1VT										

Parts List

Part number	Description	Quantity
SA398800	SA 35SS592G178G1	1.000 ea
RA389821	RA 35SS592G178G1	1.000 ea
35CB3010A01G	35 CB .75 NPT @ 6:00 (GRAY)	1.000 ea
NS2512A01	INSULATOR, CONDUIT BOX X	1.000 ea
35GS1039	05 MOLDED GASKET W/LIP, 1.12 LEAD HOLE,	1.000 ea
51XB1016A08	10-16X 1/2HXWSSLD SERTYB	2.000 ea
11XW1032G06	10-32 X .38, TAPTITE II, HEX WSHR SLTD U	1.000 ea
35EP3122D00W	MASTER ODE,203 BRG,.125NPT DRNS(WHITE)	1.000 ea
HW4072A01	BLACK DRAIN PLUG FOR .125 NPT	3.000 ea
HW5100A03	WAVY WASHER (W1543-017)	1.000 ea
35EP3307E00W	MASTER DE,205 BRG,1.623SH,.125NPT DRNS,C	1.000 ea
HW4072A01	BLACK DRAIN PLUG FOR .125 NPT	3.000 ea
12XN1032S20	10-32 X 1-1/4 HEX M.S. , STAINLESS STEEL	2.000 ea
HW4600B49	SEAL 0.938 X 1.624 X 0.250 SINGLE LIP DB	1.000 ea
35CB4522	35 LIPPED CB LID PRIMED	1.000 ea
35GS1030A02	35 GS FOR CB LID - WHITE NEOPRENE	1.000 ea
59XW0832S07	TAPTITE II,HEX WSHR UNSLTD SER,410 S.S.,	4.000 ea
HW4600B46	V-RING SLINGER 0.875 X 1.420 X .24 VITON	1.000 ea
HW2502D13	SS KEY, 3/16 SQ X 1.375	1.000 ea
HA7000A01	KEY RETAINER 7/8" DIA SHAFT	1.000 ea
MJ5001A27	32220KN GRAY SEALER *MIN BUY 4 QTS=1GAL	0.001 qt
85XU0407S04	4X1/4 U DRIVE PIN STAINLESS	2.000 ea
LB1164	LABEL,WARNING AND DRAIN	1.000 ea
HA5027A02	HA4054 T-DRAIN X2 BAGGED WITH LABEL	1.000 ea
MJ1000A02	GREASE, POLYREX EM EXXON	0.050 lb
MG1025Z02	ACTIVATOR WILKOFAST 060.02HF	0.010 ga
MG1025W01	WILKOFAST, 781.01, SIGNAL WHITE #9003	0.017 ga
HA3100S09	THRUBOLT 9.25 LENGTH SS	4.000 ea
LC0005	CONN.DIA.,TY M,9-LD,DUAL VOLT,REVERSING	1.000 ea
NP1669L	SS WD SUPER-E UL PREM REV MTG	1.000 ea
36PA1000	PKG GRP, PRINT PK1016A08	1.000 ea

MN416A01	TAG-INSTAL-MAINT no wire (2500 bx)11/25	1.000 ea
FE-0000001	ZRTG FE ASSEMBLY	1.000 ea
PE-0000002	ZRTG PE ASSEMBLY	1.000 ea

AC Induction Motor Performance Data
Record # 87056
Typical performance - not guaranteed values

Winding: 35WGG178-R003	**Type:** 3530M	**Enclosure:** TENV

Nameplate Data				**460 V, 60 Hz: High Voltage Connection**	
Rated Output (HP)			1.5	**Full Load Torque**	4.48 LB-FT
Volts			230/460	**Start Configuration**	direct on line
Full Load Amps			4.6/2.3	**Breakdown Torque**	21.02 LB-FT
R.P.M.			1770	**Pull-up Torque**	12.29 LB-FT
Hz	60	**Phase**	3	**Locked-rotor Torque**	14.9 LB-FT
NEMA Design Code	B	**KVA Code**	M	**Starting Current**	21.32 A
Service Factor (S.F.)			1	**No-load Current**	1.29 A
NEMA Nom. Eff.	86.5	**Power Factor**	72	**Line-line Res. @ 25ºC**	10.1 Ω
Rating - Duty			40C AMB-CONT	**Temp. Rise @ Rated Load**	80°C
				Locked-rotor Power Factor	55.5
				Rotor inertia	0.217 lb-ft²

Load Characteristics 460 V, 60 Hz, 1.5 HP

% of Rated Load	**25**	**50**	**75**	**100**	**125**	**150**
Power Factor	33	54	68	76	81	84
Efficiency	79.1	86.3	88.1	88.3	87.6	86.6
Speed	1790	1783	1776	1769	1761	1752
Line amperes	1.35	1.52	1.78	2.11	2.47	2.89

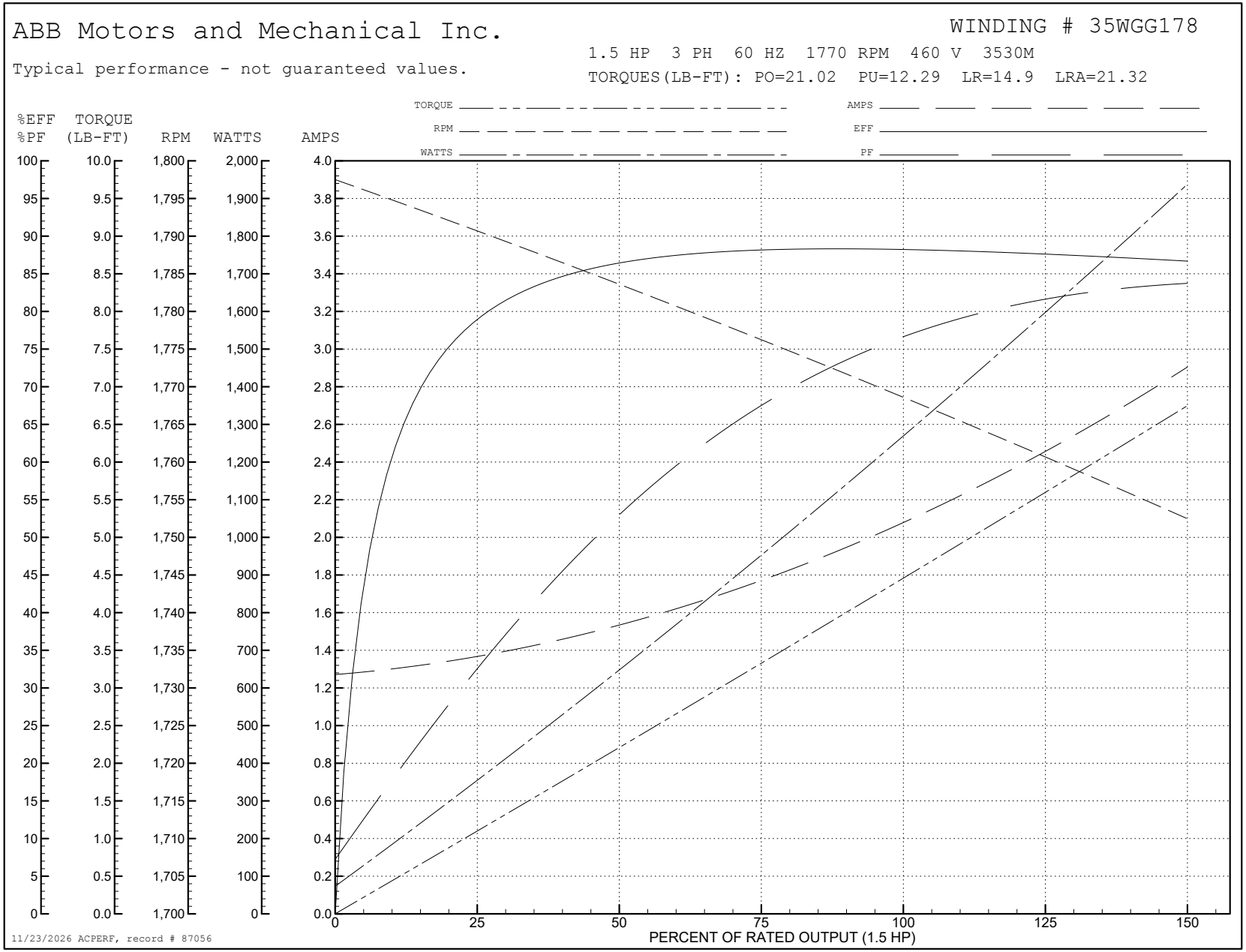
ABB Motors and Mechanical Inc.
WINDING # 35WGG178
Typical performance - not guaranteed values.
1.5 HP 3 PH 60 HZ 1770 RPM 460 V 3530M
TORQUES(LB-FT): PO=21.02 PU=12.29 LR=14.9 LRA=21.32
TORQUE
RPM
WATTS
AMPS
EFF
PF
%EFF %PF
TORQUE (LB-FT)
RPM
WATTS
AMPS
PERCENT OF RATED OUTPUT (1.5 HP)
11/23/2026 ACPERF, record # 87056

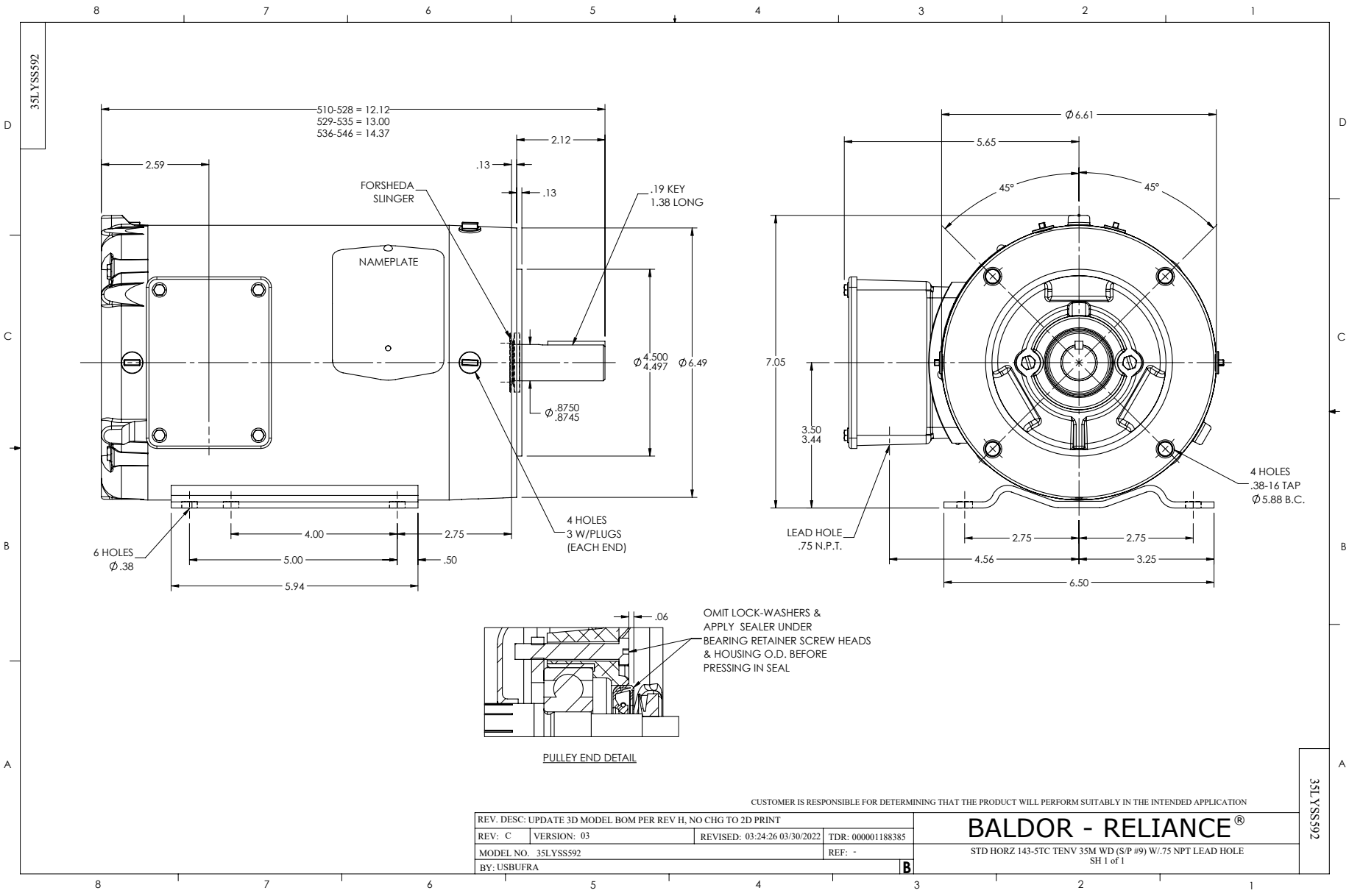
35LYSS592
510-528 = 12.12
529-535 = 13.00
536-546 = 14.37
2.59
2.12
.13
.13
FORSHEDA SLINGER
.19 KEY 1.38 LONG
NAMEPLATE
Ø 4.500 4.497
Ø 6.49
Ø .8750 .8745
4 HOLES 3 W/PLUGS (EACH END)
6 HOLES Ø .38
4.00
2.75
5.00
.50
5.94
Ø 6.61
5.65
45°
45°
7.05
3.50 3.44
4 HOLES .38-16 TAP Ø 5.88 B.C.
LEAD HOLE .75 N.P.T.
2.75
2.75
4.56
3.25
6.50
.06
OMIT LOCK-WASHERS & APPLY SEALER UNDER BEARING RETAINER SCREW HEADS & HOUSING O.D. BEFORE PRESSING IN SEAL
PULLEY END DETAIL
CUSTOMER IS RESPONSIBLE FOR DETERMINING THAT THE PRODUCT WILL PERFORM SUITABLY IN THE INTENDED APPLICATION
REV. DESC: UPDATE 3D MODEL BOM PER REV H, NO CHG TO 2D PRINT
REV: C
VERSION: 03
REVISED: 03:24:26 03/30/2022
TDR: 000001188385
MODEL NO. 35LYSS592
REF: -
BY: USBUFRA
B
BALDOR - RELIANCE®
STD HORZ 143-5TC TENV 35M WD (S/P #9) W/.75 NPT LEAD HOLE
SH 1 of 1
35LYSS592

CD0005

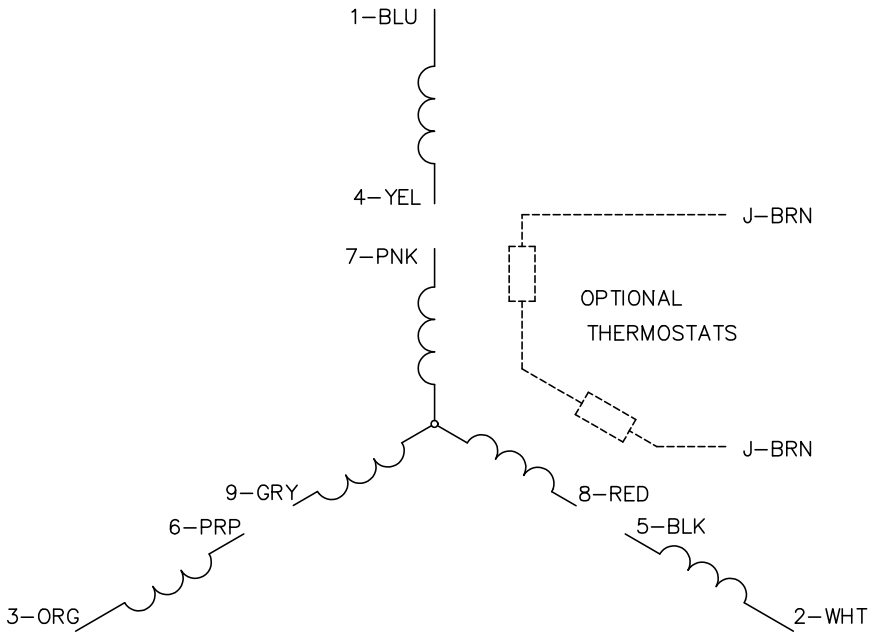

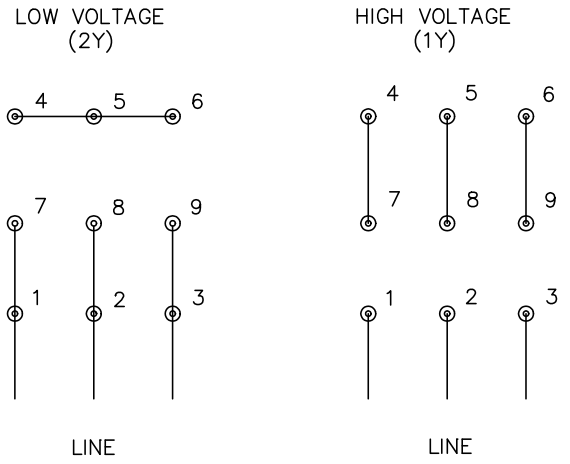

NOTES:

1. INTERCHANGE ANY TWO LINE LEADS TO REVERSE ROTATION.
2. OPTIONAL THERMOSTATS ARE PROVIDED WHEN SPECIFIED.
3. ACTUAL NUMBER OF INTERNAL PARALLEL CIRCUITS MAY BE A MULTIPLE OF THOSE SHOWN ABOVE.
4. LEAD COLORS ARE OPTIONAL. LEADS MUST ALWAYS BE NUMBERED AS SHOWN.

CD0005

REV. DESC: REVISE TO SHOW OPTIONAL COLORS			BALDOR ELECTRIC Co.
REV. LTR: E	BY: JLP	REVISED: 01/19/99 10:15	TDR: 0171435
CD0005		FILE: AAA00005140	MDL: –
		MTL: –	3PH, DV, 9 LEADS