Customer information packet

CFSWDL3507

.75HP, 1745RPM, 1PH, 60HZ, 56C, 3530L, TEFC, F1
Class - None
Division - Not Applicable

Copyright © All product information within this document is subject to ABB Motors and Mechanical Inc. copyright © protection, unless otherwise noted.
11/23/2026 2:24:13 AM

Specifications

Enclosure	TEFC
Frame	56C
Frame Material	Stainless Steel
Frequency	60.00 Hz
Haz Area Class and Group	None
Haz Area Division	Not Applicable
Motor Letter Type	Cap Start, Induction Run
Output @ Frequency	.750 HP @ 60 HZ
Phase	1
Synchronous Speed @ Frequency	1800 RPM @ 60 HZ
Voltage @ Frequency	115.0 V @ 60 HZ
	230.0 V @ 60 HZ
Agency Approvals	WEEE
	C UR US
Ambient Temperature	40 °C
Auxiliary Box	NO AUXILLARY BOX
Auxiliary Box Lead Termination	None
Base Indicator	Rigid
Bearing Grease Type	Polyrex EM (-20F +300F)
Blower	None
Current @ Voltage	4.100 A @ 230.0 V
	8.200 A @ 115.0 V
Design Code	N
Drip Cover	No Drip Cover
Duty Rating	CONT
Efficiency @ 100% Load	74.0 %
Electrically Isolated Bearing	Not Electrically Isolated
Feedback Device	NO FEEDBACK
Front Shaft Indicator	None
Heater Indicator	No Heater
High Voltage Full Load Amps	4.1 a
Insulation Class	F

Part Detail

Revision	C
Type	AC
Mech. spec.	35E4732
Base	
Status	PRD/A
Elec. spec.	35WGG409
Layout	35LYE4732
Eff. date	12-03-2024
CD Diagram	CD0648
Poles	04
Leads	7#18
Proprietary	False
Created date	02-23-2023

Inverter Code	Not Inverter
KVA Code	K
Lifting Lugs	No Lifting Lugs
Locked Bearing Indicator	Locked Bearing
Motor Finish	UNPAINTED
Motor Lead Quantity/Wire Size	7 @ 18 AWG
Motor Lead Termination	Flying Leads
Motor Standards	NEMA
Motor Type	3530L
Mounting Arrangement	F1
Number of Poles	4
Overall Length	14.83 IN
Power Factor	78
Product Family	WD All SD Non-Encapsulated
Pulley End Bearing Type	Sealed Bearing
Pulley Face Code	C-Face
Pulley Shaft Indicator	Standard
Rodent Screen	None
RoHS Status	ROHS COMPLIANT
Service Factor	1.15
Shaft Diameter	0.625 IN
Shaft Ground Indicator	No Shaft Grounding
Shaft Rotation	Reversible
Shaft Slinger Indicator	No Slinger
Speed	1745 rpm
Speed Code	Single Speed
Starting Method	Direct on line
Thermal Device - Bearing	None
Thermal Device - Winding	None
Vibration Sensor Indicator	No Vibration Sensor
Winding Thermal 1	None
Winding Thermal 2	None

Nameplate

NP4427ALG30											
CAT #	CFSWDL3507			**WT**	33		**LBS**				
SPEC	35E4732G409G1			**ENCL**	TEFC						
SER #				**CC**			**IP**	69			
HP	.75						**NEMA NOM. EFF**		74		
VOLTS	115/230										
AMPS	8.2/4.1						**PF**	78			
RATING	40C AMB-CONT										
RPM	1745										
FRAME	56C	**HZ**	60	**CODE**	K		**CLASS**		F		
SER.F.	1.15	**SF AMP**					**PH**	1	**DES**	N	
DE	6205		**ODE**	6205							
LUBRICATION	POLYREX EM										
									QR		
YR											

Parts List

Part number	Description	Quantity
SA414930	SA 35E4732G409G1	1.000 ea
RA406699	RA 35E4732G409G1	1.000 ea
EC1460A05SP	ELEC CAP, 460-552 MFD, 125V, 2.06D X 3.	1.000 ea
WD3006A01	RSS-2-103JT 2W 10K RES. METAL OXIDE 5%	1.000 ea
ES5503	115/40A,L ,CV ,130CO,.8*2.2*1.4,*4-7-2	1.000 ea
11XW1032G06	10-32 X .38, TAPTITE II, HEX WSHR SLTD U	1.000 ea
35EP1940A05	FRONT TEFC 205 BRG (STAINLESS)	1.000 ea
RM1070A25	O-RING, VITON/FKM .070CS X 6.190ID	1.000 ea
HW4600G01	.984X1.499X.25 VITON SLICK SERIES LIP	1.000 ea
HW4600E99	25 X 42 X 6 AFX SEAL, GRAPHITE INFUSED V	1.000 ea
HW4500S33	1/8 NPT STAINLESS #304 SS PLUG	4.000 ea
HW4500S33	1/8 NPT STAINLESS #304 SS PLUG	4.000 ea
HW5100A05	WVY WSHR F/205 & 304 BRGS	1.000 ea
35EP1935A02	PULLEY 56C/143-5TC ENCL 205 BRG	1.000 ea
RM1070A25	O-RING, VITON/FKM .070CS X 6.190ID	1.000 ea
HW4600G01	.984X1.499X.25 VITON SLICK SERIES LIP	1.000 ea
HW4600E99	25 X 42 X 6 AFX SEAL, GRAPHITE INFUSED V	1.000 ea
RM1070A26	O-RING,4.5MM I.D.X1.5MM C.S. (VITON)	4.000 ea
35FH4005A39	IEC FH NO GREASER DEBURR/CLEAN - SS	1.000 ea
10XN1032FS06	HEX HD CAP SCREW 10-32 X 3/8 SS FOOD SAF	3.000 ea
35CB1510A01G	35 CB LID SINGLE PHASE MACHINED W/ FIPG	1.000 ea
10XN1032FS08	HEX HD CAP SCREW 10-32 X 1/2 SS FOOD SAF	6.000 ea
HW2502D13	SS KEY, 3/16 SQ X 1.375	1.000 ea
HA7000A04	KEY RETAINER 0.625 DIA SHAFTS	1.000 ea
MJ5001A27	32220KN GRAY SEALER *MIN BUY 4 QTS=1GAL	0.005 qt
MJ5004A93	FOOD GRADE (H1 RATED) ANTISEIZE THRD COM	0.005 ea
HA5027A09	DRAIN KIT,(2)HA4002A03 BAGGED W/LABEL	1.000 ea
WD1000A15	3-520132-2 AMP FLAG (4M/RL NON-CANC/NON-	2.000 ea
MJ1000A02	GREASE, POLYREX EM EXXON	0.050 lb
WD5603A02	KIT, CLOSED-END LEAD SPLICE (18-14GA)	1.000 ea
HA7724	CAPACITOR CLAMP & SWITCH BRACKET FOR 35C	1.000 ea

51XW0832A07	8-32 X .44, TAPTITE II, HEX WSHR SLTD SE	2.000 ea
51XN1032A08	10-32 X 0.500 HX WS SL SR ZN	1.000 ea
35FN3002A05SP	EXFN, PLASTIC, 6.376 OD, .638 ID	1.000 ea
11XB1214S16	12-14X1.00 HXWSSLD TYP B STAINLESS	1.000 ea
HA3100FS60	THRUBOLT, 10-32 X 10.375 SS FOOD SAFE	4.000 ea
36PA1000	PKG GRP, PRINT PK1016A08	1.000 ea
MN416A01	TAG-INSTAL-MAINT no wire (2500 bx)11/25	1.000 ea
FE-0000016	ZTRG FE ASSEMBLY	1.000 ea
PE-0000010	ZRTG PE ASSEMBLY	1.000 ea

AC Induction Motor Performance Data
Record # 89159
Typical performance - not guaranteed values

Winding: 35WGG409-R001	**Type:** 3530L	**Enclosure:** TEFC

Nameplate Data				**115 V, 60 Hz: Low Voltage Connection**	
Rated Output (HP)			.75	**Full Load Torque**	2.23 LB-FT
Volts			115/230	**Start Configuration**	direct on line
Full Load Amps			8.2/4.1	**Breakdown Torque**	5.29 LB-FT
R.P.M.			1745	**Pull-up Torque**	3.99 LB-FT
Hz	60	**Phase**	1	**Locked-rotor Torque**	8.9 LB-FT
NEMA Design Code	N	**KVA Code**	K	**Starting Current**	51.11 A
Service Factor (S.F.)			1.25	**No-load Current**	4.46 A
NEMA Nom. Eff.	74	**Power Factor**	78	**Line-line Res. @ 25ºC**	0.917 Ω A Ph 1.84 Ω B Ph
Rating - Duty			40C AMB-CONT	**Temp. Rise @ Rated Load**	
S.F. Amps			9.9/4.95	**Temp. Rise @ S.F. Load**	
				Locked-rotor Power Factor	95.6
				Rotor inertia	0.217 lb-ft²

Load Characteristics 115 V, 60 Hz, 0.75 HP

% of Rated Load	**25**	**50**	**75**	**100**	**125**	**150**	**S.F.**
Power Factor	41	59	71	77	82	85	82
Efficiency	61.6	73	75.5	75.4	73.4	70.2	73.4
Speed	1786	1773	1759	1744	1726	1702	1726
Line amperes	4.81	5.65	6.82	8.22	9.88	11.8	9.88

ABB Motors and Mechanical Inc.

WINDING # 35WGG409

0.75 HP 1 PH 60 HZ 1745 RPM 115 V 3530L

Typical performance - not guaranteed values.

TORQUES(LB-FT): PO=5.29 PU=3.99 LR=8.9 LRA=51.11

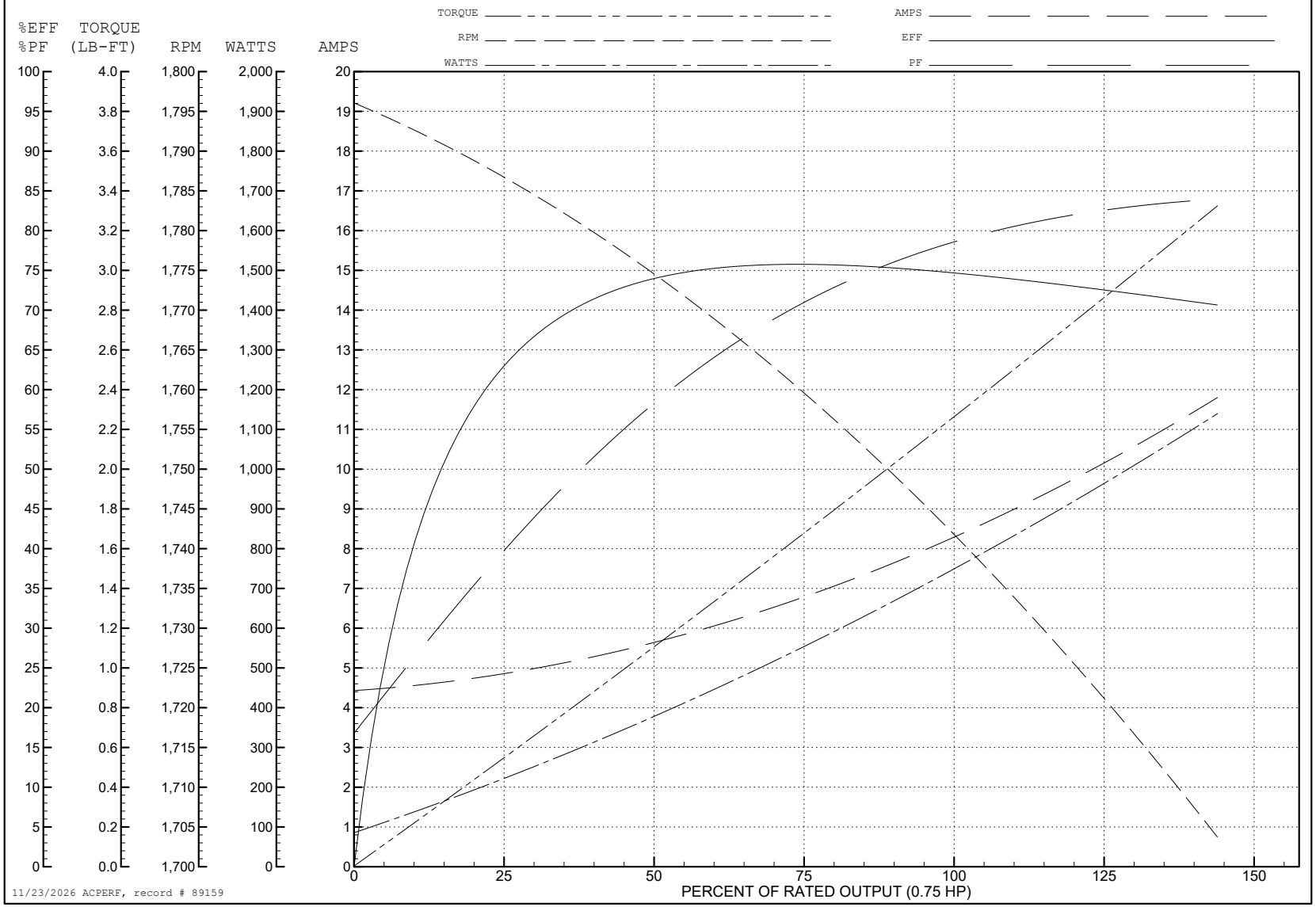

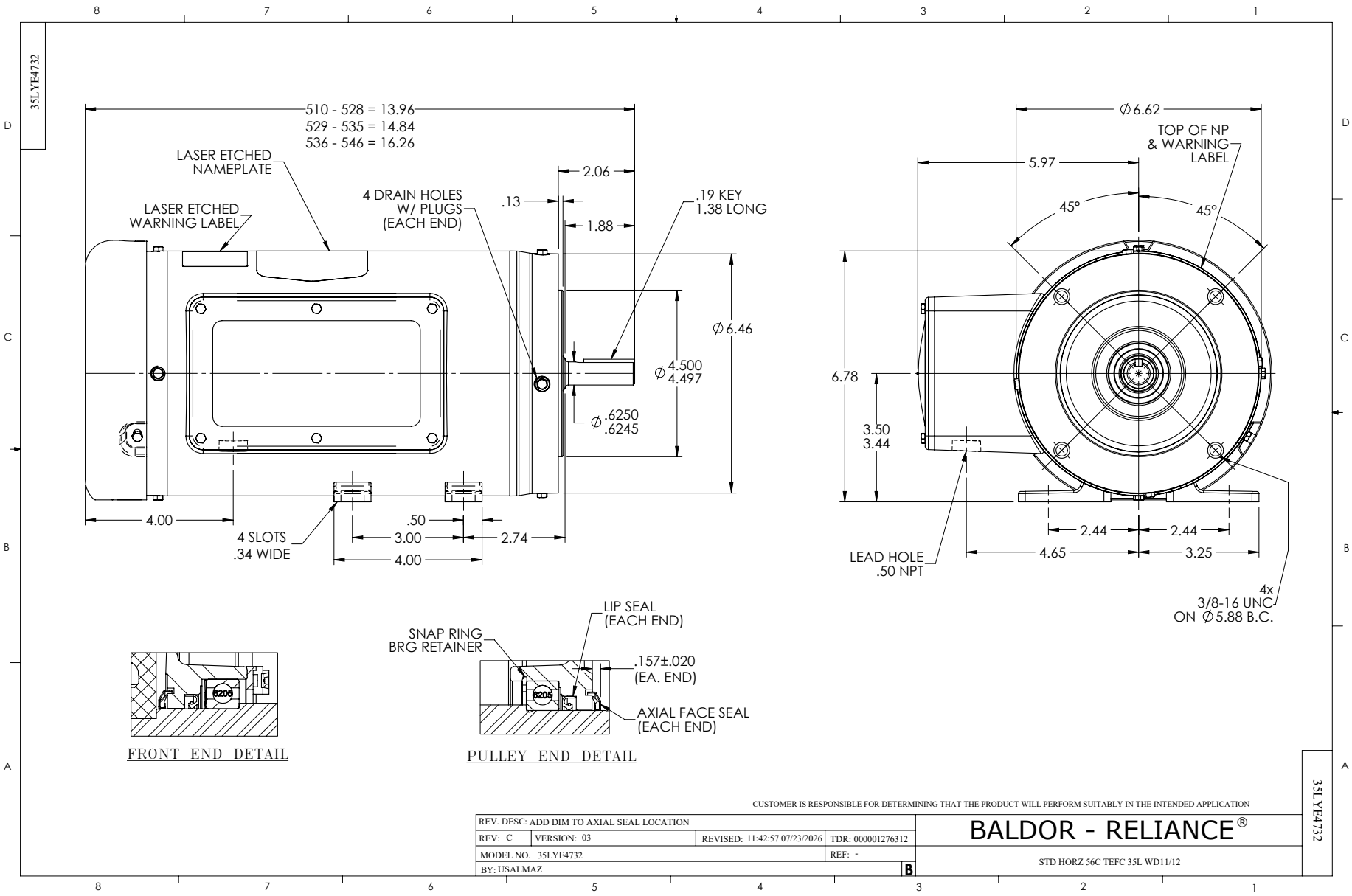
35LYE4732
510 - 528 = 13.96
529 - 535 = 14.84
536 - 546 = 16.26
LASER ETCHED NAMEPLATE
LASER ETCHED WARNING LABEL
4 DRAIN HOLES W/ PLUGS (EACH END)
2.06
.13
1.88
.19 KEY 1.38 LONG
Ø6.46
Ø4.500 4.497
Ø.6250 .6245
4.00
4 SLOTS .34 WIDE
.50
3.00
2.74
4.00
Ø6.62
TOP OF NP & WARNING LABEL
5.97
45°
45°
6.78
3.50 3.44
2.44
2.44
4.65
3.25
LEAD HOLE .50 NPT
4x 3/8-16 UNC ON Ø5.88 B.C.
LIP SEAL (EACH END)
SNAP RING BRG RETAINER
.157±.020 (EA. END)
AXIAL FACE SEAL (EACH END)
6206
6206
FRONT END DETAIL
PULLEY END DETAIL
CUSTOMER IS RESPONSIBLE FOR DETERMINING THAT THE PRODUCT WILL PERFORM SUITABLY IN THE INTENDED APPLICATION
REV. DESC: ADD DIM TO AXIAL SEAL LOCATION
REV: C
VERSION: 03
REVISED: 11:42:57 07/23/2026
TDR: 000001276312
MODEL NO. 35LYE4732
REF: -
BY: USALMAZ
B
BALDOR - RELIANCE®
STD HORZ 56C TEFC 35L WD11/12
35LYE4732

CD0648

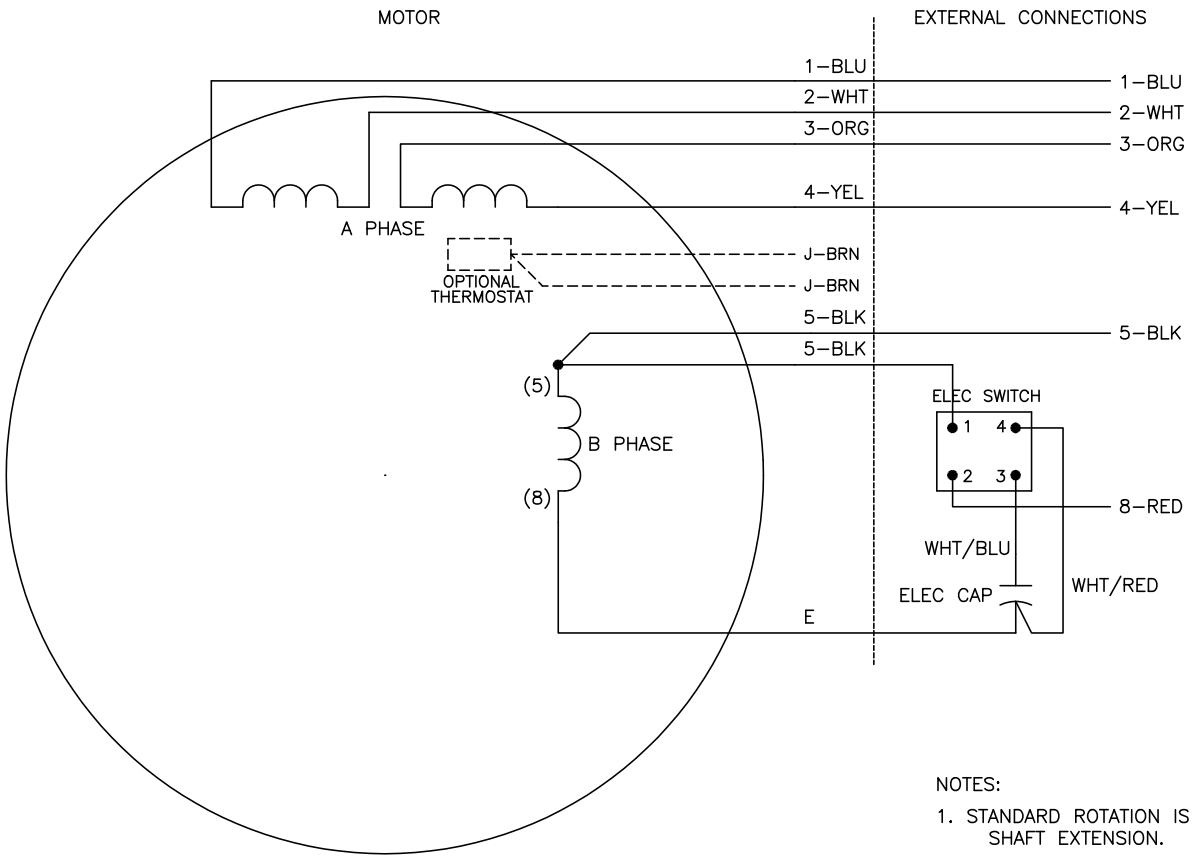

	LINE A	LINE B	JOIN
HIGH STD	1	4,5	2,3,8
HIGH OPP	1	4,8	2,3,5
LOW STD	1,3,8	2,4,5	–
LOW OPP	1,3,5	2,4,8	–

NOTES:

1. STANDARD ROTATION IS CCW FACING END OPPOSITE SHAFT EXTENSION.
2. OPTIONAL THERMOSTAT IS PROVIDED WHEN SPECIFIED.
3. MULTIPLE CAPACITORS ARE CONNECTED IN PARALLEL UNLESS OTHERWISE SPECIFIED.
4. USE STEARNS ELECTRONIC START SWITCH OR EQUIVALENT.
5. LEAD COLORS ARE OPTIONAL. LEADS MUST ALWAYS BE NUMBERED AS SHOWN.

CD0648

REV. DESC: ADD OPTIONAL LEAD COLORS			BALDOR ELECTRIC Co.
REV. LTR: B	BY: JLP	REVISED: 12/04/00 10:12	TDR: 0226347
CD0648		FILE: AAA00011416	REF: –
		MTL: –	TYPE L, DV, REV, 6 LEAD, SEPERATE CAP AND ELECTRONIC SWITCH