# Customer information packet

## CFSWDM3543-E

.75HP, 1170RPM, 3PH, 60HZ, 56C, 3530M, TENV, F1
Class - None
Division - Not Applicable

Copyright © All product information within this document is subject to ABB Motors and Mechanical Inc. copyright © protection, unless otherwise noted.
11/23/2026 2:38:57 AM

## Specifications

| | |
|---|---|
| **Enclosure** | TENV |
| **Frame** | 56C |
| **Frame Material** | Stainless Steel |
| **Frequency** | 60.00 Hz |
| **Haz Area Class and Group** | None |
| **Haz Area Division** | Not Applicable |
| **Motor Letter Type** | Three Phase |
| **Output @ Frequency** | .750 HP @ 60 HZ |
| **Phase** | 3 |
| **Synchronous Speed @ Frequency** | 1200 RPM @ 60 HZ |
| **Voltage @ Frequency** | 208.0 V @ 60 HZ |
| | 230.0 V @ 60 HZ |
| | 460.0 V @ 60 HZ |
| **Agency Approvals** | CSA |
| | CURUSEEV |
| | NEMA PREMIUM |
| | NEMA_PREMIUM |
| | WEEE |
| **Ambient Temperature** | 40 °C |
| **Auxiliary Box** | NO AUXILLARY BOX |
| **Auxiliary Box Lead Termination** | None |
| **Base Indicator** | Rigid |
| **Bearing Grease Type** | Polyrex EM (-20F +300F) |
| **Blower** | None |
| **Current @ Voltage** | 2.800 A @ 208.0 V |
| | 2.700 A @ 230.0 V |
| | 1.350 A @ 460.0 V |
| **Design Code** | B |
| **Drip Cover** | No Drip Cover |
| **Duty Rating** | CONT |
| **Efficiency @ 100% Load** | 82.5 % |
| **Electrically Isolated Bearing** | Not Electrically Isolated |

## Part Detail

| | |
|---|---|
| **Revision** | D |
| **Type** | AC |
| **Mech. spec.** | 35E4735 |
| **Base** | |
| **Status** | PRD/A |
| **Elec. spec.** | 35WGG335 |
| **Layout** | 35LYE4735 |
| **Eff. date** | 09-09-2026 |
| **CD Diagram** | CD0005 |
| **Poles** | 06 |
| **Leads** | 9#18 |
| **Proprietary** | False |
| **Created date** | 09-09-2022 |

| | |
|---|---|
| **Feedback Device** | NO FEEDBACK |
| **Front Shaft Indicator** | None |
| **Heater Indicator** | No Heater |
| **High Voltage Full Load Amps** | 1.4 a |
| **Insulation Class** | H |
| **Inverter Code** | Inverter Duty |
| **KVA Code** | L |
| **Lifting Lugs** | No Lifting Lugs |
| **Locked Bearing Indicator** | Locked Bearing |
| **Max Speed** | 1800 rpm |
| **Motor Finish** | UNPAINTED |
| **Motor Lead Quantity/Wire Size** | 9 @ 18 AWG |
| **Motor Lead Termination** | Flying Leads |
| **Motor Standards** | NEMA |
| **Motor Type** | 3530M |
| **Mounting Arrangement** | F1 |
| **Number of Poles** | 6 |
| **Overall Length** | 13.67 IN |
| **Power Factor** | 61 |
| **Product Family** | WD All SD Non-Encapsulated |
| **Pulley End Bearing Type** | Sealed Bearing |
| **Pulley Face Code** | C-Face |
| **Pulley Shaft Indicator** | Standard |
| **Rodent Screen** | None |
| **Service Factor** | 1.15 |
| **Shaft Diameter** | 0.625 IN |
| **Shaft Ground Indicator** | No Shaft Grounding |
| **Shaft Rotation** | Reversible |
| **Shaft Slinger Indicator** | No Slinger |
| **Speed** | 1170 rpm |
| **Speed Code** | Single Speed |
| **Starting Method** | Direct on line |
| **Thermal Device - Bearing** | None |
| **Thermal Device - Winding** | None |

| | |
|---|---|
| **Vibration Sensor Indicator** | No Vibration Sensor |
| **Winding Thermal 1** | None |
| **Winding Thermal 2** | None |

**Nameplate**

| NP4427ALA01 | | | | | | | | | | | | |
|---|---|---|---|---|---|---|---|---|---|---|---|---|
| **CAT #** | CFSWDM3543-E | | | **WT** | 45 | **LBS** | | | | | | |
| **SPEC** | 35E4735G335G1 | | | **ENCL** | TENV | | | | | | | |
| **SER #** | | | | **CC** | 010A | **IP** | 69 | | | | | |
| **HP** | .75 | | | **MAG CUR** | 1.6-1.8/.9 | | | | | | | |
| **VOLTS** | 208-230/460 | | | | | **NEMA NOM. EFF** | 82.5 | | | | | |
| **AMPS** | 2.8-2.7/1.35 | | | | | **PF** | 61 | | | | | |
| **RATING** | 40C AMB-CONT | | | | | | | | | | | |
| **RPM** | 1170 | | | | | **MAX RPM** | 1800 | | | | | |
| **FRAME** | 56C | **HZ** | 60 | **CODE** | L | **CLASS** | H | | | | | |
| **SER.F.** | 1.15 | **SF AMP** | 3-2.9/1.45 | | | **PH** | 3 | **DES** | B | | | |
| **DE** | 6205 | | | **ODE** | 6205 | | | | | | | |
| **LUBRICATION** | POLYREX EM | | | | | | | | | | | |
| **ID LOGO** | | **INVERTER TYPE** | | **VPWM** | | **CHP** | 60 | **TO** | 90 | | 1.5:1 | |
| **ID LOGO** | **WK2** | 0.217 | **CT** | 15 | **TO** | 60 | | 4:1 | | | | |
| **ID LOGO** | **SL HZ** | 1.5 | **VT** | 3 | **TO** | 60 | | 20:1 | | | | |
| | | | | | | | | | | | | |
| | | | | | | | | | | | | |
| | | | | | | | | | | | | |
| | | | | | | | | | | **QR** | | |
| **YR** | | | | | | | | | | | | |

**Parts List**

| Part number | Description | Quantity |
|---|---|---|
| SA407343 | SA 35E4735G335G1 | 1.000 ea |
| RA398842 | RA 35E4735G335G1 | 1.000 ea |
| 35CB1017A01 | 35/36 MID SECT - 3 PC. CONDUIT BOX 1/2 N | 1.000 ea |
| HA3424S48 | STUD - M6X1.0 THDS X 3.00" | 1.000 ea |
| RM1070A81 | O-RING, -043 VITON/FKM .070CS X 3.489ID | 1.000 ea |
| 11XW1032G08 | 10-32 X .50, TAPTITE II, HEX WSHR SLTD U | 1.000 ea |
| HW3001B02 | BRASS CUP WASHER W/GROUND SYMBOL TAB, | 1.000 ea |
| 35CB1513A01 | 35-36-37 MACH. LID - 3 PC. CONDUIT BOX | 1.000 ea |
| HW2502D13 | SS KEY, 3/16 SQ X 1.375 | 1.000 ea |
| 35EP1940A03 | FRONT TENV 205 BRG (STAINLESS) | 1.000 ea |
| RM1070A25 | O-RING, VITON/FKM .070CS X 6.190ID | 1.000 ea |
| HW4500S33 | 1/8 NPT STAINLESS #304 SS PLUG | 4.000 ea |
| RM1070A26 | O-RING,4.5MM I.D.X1.5MM C.S. (VITON) | 4.000 ea |
| RM1070A81 | O-RING, -043 VITON/FKM .070CS X 3.489ID | 1.000 ea |
| HW5100A05 | WVY WSHR F/205 & 304 BRGS | 1.000 ea |
| RM1006A03 | GROMMET, #2867 1.12 HOLE (ATLANTIC INDIA | 1.000 ea |
| 35EP1935A02 | PULLEY 56C/143-5TC ENCL 205 BRG | 1.000 ea |
| RM1070A25 | O-RING, VITON/FKM .070CS X 6.190ID | 1.000 ea |
| HW4600G01 | .984X1.499X.25 VITON SLICK SERIES LIP | 1.000 ea |
| HW4600E99 | 25 X 42 X 6 AFX SEAL, GRAPHITE INFUSED V | 1.000 ea |
| HW5002A103 | RET RING N5002-206 WALDES KOHINOOR | 1.000 ea |
| HW4500S33 | 1/8 NPT STAINLESS #304 SS PLUG | 4.000 ea |
| HA7000A04 | KEY RETAINER 0.625 DIA SHAFTS | 1.000 ea |
| MJ5001A27 | 32220KN GRAY SEALER *MIN BUY 4 QTS=1GAL | 0.005 qt |
| MJ5004A93 | FOOD GRADE (H1 RATED) ANTISEIZE THRD COM | 0.005 ea |
| HA1025A21 | WSHR,FELT .125" THK | 1.000 ea |
| HA5027A09 | DRAIN KIT,(2)HA4002A03 BAGGED W/LABEL | 1.000 ea |
| MJ1000A02 | GREASE, POLYREX EM EXXON | 0.050 lb |
| WD5603A01 | KIT, CLOSED-END LEAD SPLICE (18-14GA) | 1.000 ea |
| HA3100FS60 | THRUBOLT, 10-32 X 10.375 SS FOOD SAFE | 4.000 ea |
| 36PA1000 | PKG GRP, PRINT PK1016A08 | 1.000 ea |

| | | |
|---|---|---|
| MN416A01 | TAG-INSTAL-MAINT no wire (2500 bx)11/25 | 1.000 ea |
| FE-0000007 | ZRTG FE ASSEMBLY | 1.000 ea |
| PE-0000010 | ZRTG PE ASSEMBLY | 1.000 ea |

**AC Induction Motor Performance Data**
Record # 87730
Preliminary Data Sheet

| **Winding:** 35WGG335-R001 | **Type:** 3530M | **Enclosure:** TENV |
|---|---|---|

| **Nameplate Data** | | | | **460 V, 60 Hz: High Voltage Connection** | |
|---|---|---|---|---|---|
| **Rated Output (HP)** | | | .75 | **Full Load Torque** | 3.38 LB-FT |
| **Volts** | | | 208-230/460 | **Start Configuration** | direct on line |
| **Full Load Amps** | | | 2.8-2.7/1.35 | **Breakdown Torque** | 13.03 LB-FT |
| **R.P.M.** | | | 1170 | **Pull-up Torque** | 7.09 LB-FT |
| **Hz** | 60 | **Phase** | 3 | **Locked-rotor Torque** | 8.26 LB-FT |
| **NEMA Design Code** | B | **KVA Code** | L | **Starting Current** | 8.66 A |
| **Service Factor (S.F.)** | | | 1.15 | **No-load Current** | 0.928 A |
| **NEMA Nom. Eff.** | 82.5 | **Power Factor** | 61 | **Line-line Res. @ 25ºC** | 22.1 Ω |
| **Rating - Duty** | | | 40C AMB-CONT | **Temp. Rise @ Rated Load** | 70°C |
| **S.F. Amps** | | | 3-2.9/1.45 | **Temp. Rise @ S.F. Load** | 80°C |
| | | | | **Locked-rotor Power Factor** | 46.9 |
| | | | | **Rotor inertia** | 0.218 lb-ft² |

**Load Characteristics 460 V, 60 Hz, 0.75 HP**

| **% of Rated Load** | **25** | **50** | **75** | **100** | **125** | **150** | **S.F.** |
|---|---|---|---|---|---|---|---|
| **Power Factor** | 28 | 43 | 55 | 64 | 70 | 74 | 68 |
| **Efficiency** | 67.6 | 78.4 | 81.4 | 82.1 | 81.5 | 80.3 | 81.7 |
| **Speed** | 1194 | 1187 | 1181 | 1173 | 1165 | 1156 | 1168 |
| **Line amperes** | 0.953 | 1.04 | 1.17 | 1.34 | 1.54 | 1.77 | 1.46 |

ABB Motors and Mechanical Inc.

WINDING # 35WGG335

0.75 HP 3 PH 60 HZ 1170 RPM 460 V 3530M

Typical performance - not guaranteed values.

TORQUES(LB-FT): PO=13.03 PU=7.09 LR=8.26 LRA=8.66

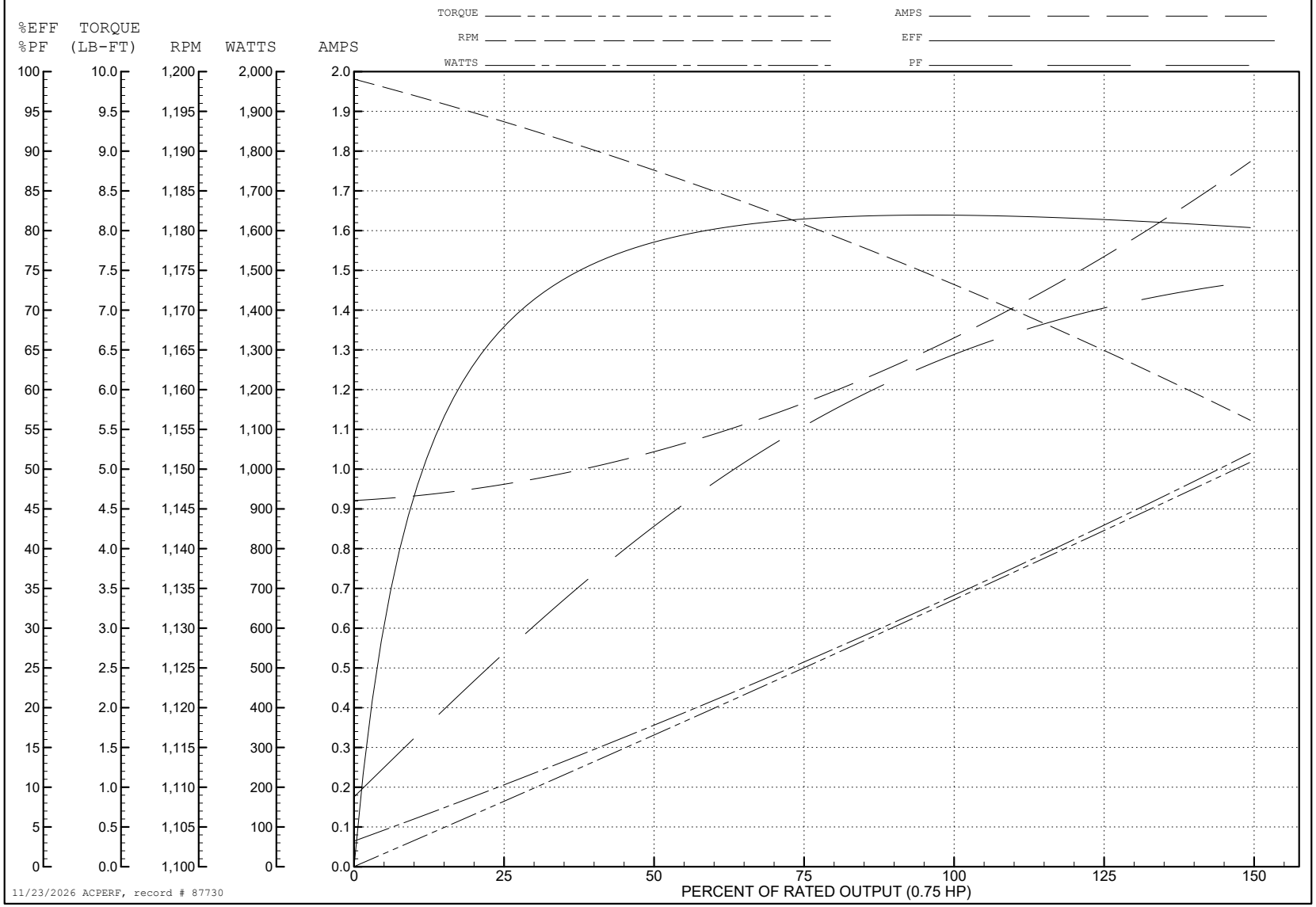

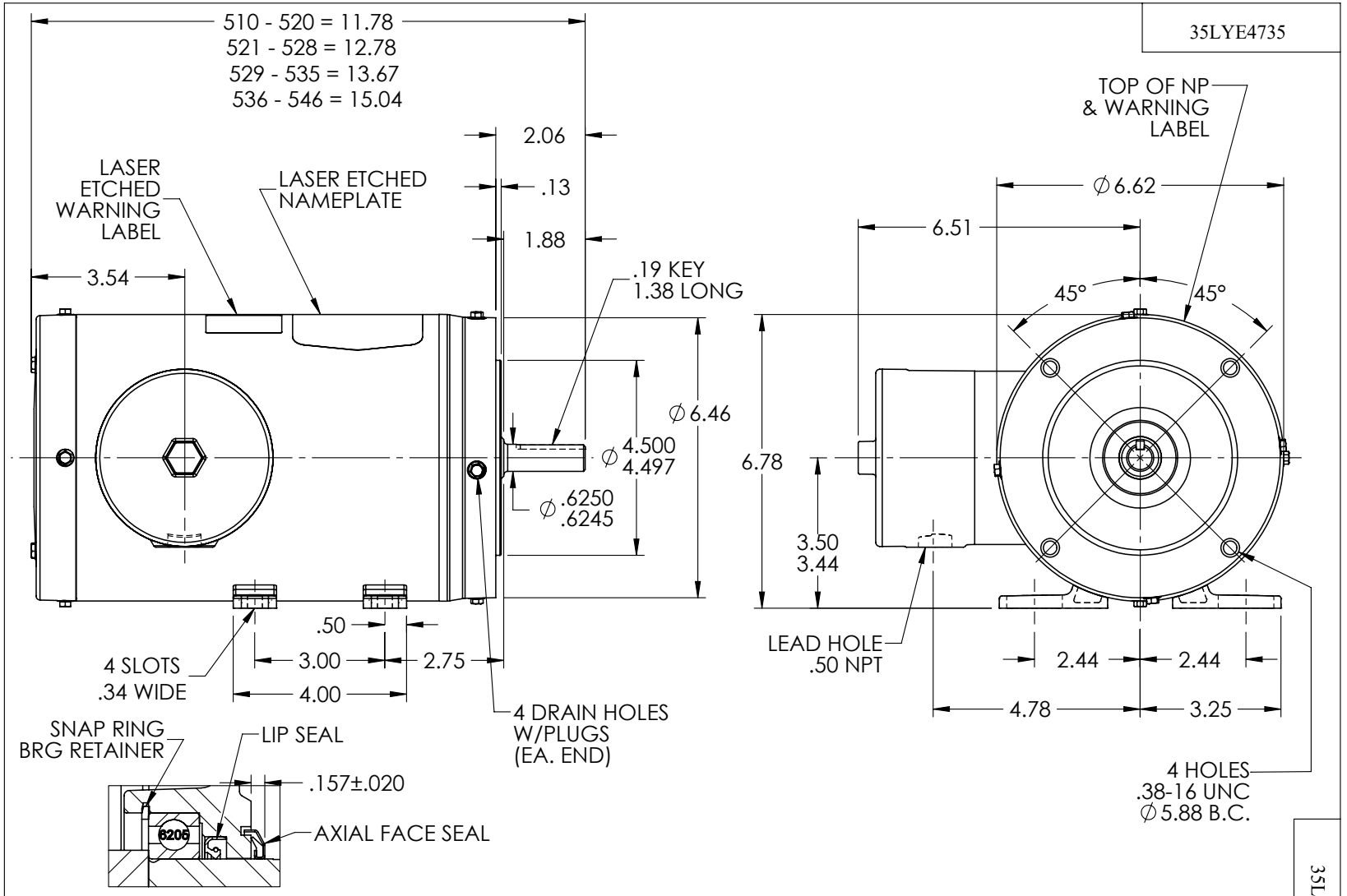
35LYE4735
510 - 520 = 11.78
521 - 528 = 12.78
529 - 535 = 13.67
536 - 546 = 15.04
2.06
.13
1.88
LASER ETCHED WARNING LABEL
LASER ETCHED NAMEPLATE
3.54
.19 KEY 1.38 LONG
∅6.46
∅4.500 4.497
∅.6250 .6245
.50
3.00
2.75
4.00
4 SLOTS .34 WIDE
4 DRAIN HOLES W/PLUGS (EA. END)
TOP OF NP & WARNING LABEL
∅6.62
6.51
45°
45°
6.78
3.50 3.44
LEAD HOLE .50 NPT
2.44
2.44
4.78
3.25
4 HOLES .38-16 UNC ∅5.88 B.C.
SNAP RING BRG RETAINER
LIP SEAL
.157±.020
AXIAL FACE SEAL
6206
PULLEY END DETAIL
CUSTOMER IS RESPONSIBLE FOR DETERMINING THAT THE PRODUCT WILL PERFORM SUITABLY IN THE INTENDED APPLICATION
REV. DESC: ADD DIM TO AXIAL SEAL LOCATION
REV: E
VERSION: 05
REVISED: 11:46:52 07/23/2026
TDR: 000001276312
BALDOR - RELIANCE®
35LYE4735
MODEL NO. 35LYE4735
REF: -
BY: USALMAZ
STD HORZ 56C TENV 35M WD11/12
35LYE4735

CD0005

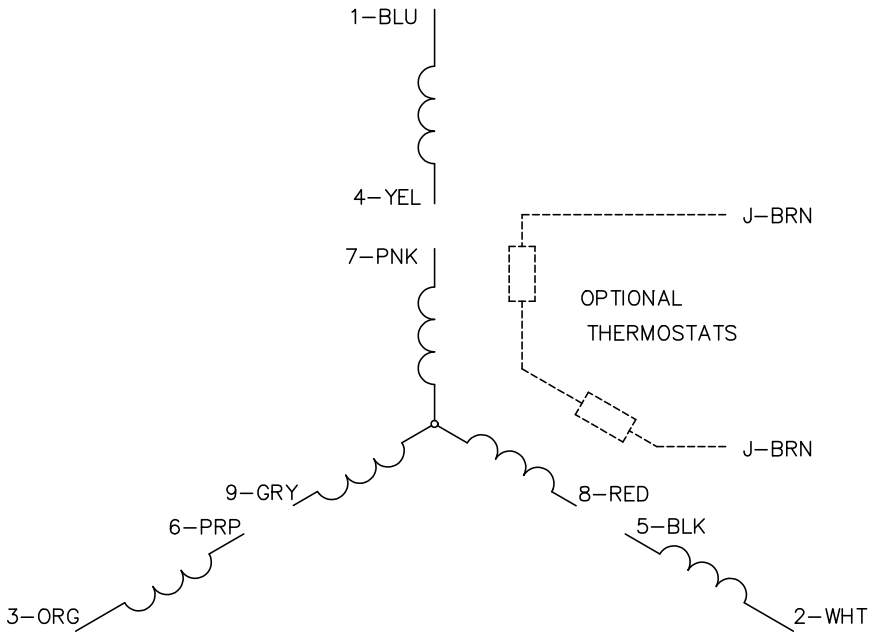


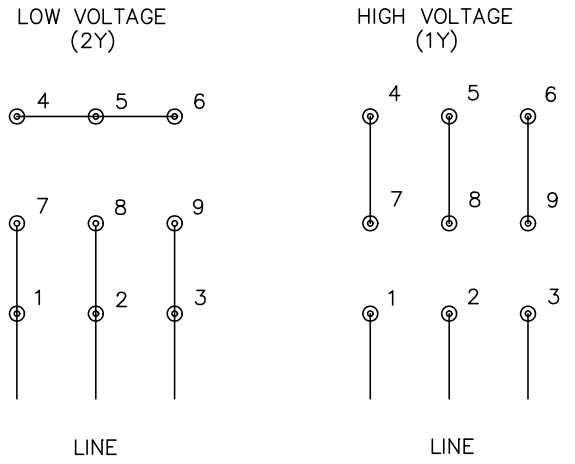


NOTES:

1. INTERCHANGE ANY TWO LINE LEADS TO REVERSE ROTATION.
2. OPTIONAL THERMOSTATS ARE PROVIDED WHEN SPECIFIED.
3. ACTUAL NUMBER OF INTERNAL PARALLEL CIRCUITS MAY BE A MULTIPLE OF THOSE SHOWN ABOVE.
4. LEAD COLORS ARE OPTIONAL. LEADS MUST ALWAYS BE NUMBERED AS SHOWN.

CD0005

| | | | |
|---|---|---|---|
| REV. DESC: REVISE TO SHOW OPTIONAL COLORS | | | BALDOR ELECTRIC Co. |
| REV. LTR: E | BY: JLP | REVISED: 01/19/99 10:15 | TDR: 0171435 |
| CD0005 | | FILE: AAA00005140 | MDL: – |
| | | MTL: – | 3PH, DV, 9 LEADS |