Customer information packet

CFSWDM3546-E

1HP, 1770RPM, 3PH, 60HZ, 56C, 3522M, TENV, F1, N
Class - None
Division - Not Applicable

Copyright © All product information within this document is subject to ABB Motors and Mechanical Inc. copyright © protection, unless otherwise noted.
11/23/2026 2:36:17 AM

Specifications

Enclosure	TENV
Frame	56C
Frame Material	Stainless Steel
Frequency	60.00 Hz
Haz Area Class and Group	None
Haz Area Division	Not Applicable
Motor Letter Type	Three Phase
Output @ Frequency	1.000 HP @ 60 HZ
Phase	3
Synchronous Speed @ Frequency	1800 RPM @ 60 HZ
Voltage @ Frequency	460.0 V @ 60 HZ
	230.0 V @ 60 HZ
Agency Approvals	NEMA PREMIUM
	NEMA_PREMIUM
	UR
	CSA EEV
Ambient Temperature	40 °C
Auxiliary Box	NO AUXILLARY BOX
Auxiliary Box Lead Termination	None
Base Indicator	Rigid
Bearing Grease Type	Polyrex EM (-20F +300F)
Blower	None
Current @ Voltage	3.300 A @ 208.0 V
	3.340 A @ 230.0 V
	1.670 A @ 460.0 V
Design Code	B
Drip Cover	No Drip Cover
Duty Rating	CONT
Efficiency @ 100% Load	85.5 %
Electrically Isolated Bearing	Not Electrically Isolated
Feedback Device	NO FEEDBACK
Front Shaft Indicator	None

Part Detail

Revision	F
Type	AC
Mech. spec.	35E4735
Base	
Status	PRD/A
Elec. spec.	35WGG184
Layout	35LYE4735
Eff. date	08-14-2023
CD Diagram	CD0005
Poles	04
Leads	9#18
Proprietary	False
Created date	07-16-2021

Heater Indicator	No Heater
High Voltage Full Load Amps	1.7 a
Insulation Class	H
Inverter Code	Inverter Ready
KVA Code	N
Lifting Lugs	No Lifting Lugs
Locked Bearing Indicator	Locked Bearing
Motor Finish	UNPAINTED
Motor Lead Quantity/Wire Size	9 @ 18 AWG
Motor Lead Termination	Flying Leads
Motor Standards	NEMA
Motor Type	3522M
Mounting Arrangement	F1
Number of Poles	4
Overall Length	12.78 IN
Power Factor	66
Product Family	WD All SS Encapsulated
Pulley End Bearing Type	Sealed Bearing
Pulley Face Code	C-Face
Pulley Shaft Indicator	Standard
Rodent Screen	None
RoHS Status	ROHS COMPLIANT
Service Factor	1.15
Shaft Diameter	0.625 IN
Shaft Ground Indicator	No Shaft Grounding
Shaft Rotation	Reversible
Shaft Slinger Indicator	No Slinger
Speed	1770 rpm
Speed Code	Single Speed
Starting Method	Direct on line
Thermal Device - Bearing	None
Thermal Device - Winding	None
Vibration Sensor Indicator	No Vibration Sensor
Winding Thermal 1	None

Winding Thermal 2	None

Nameplate

NP4427AAA01												
CAT #	CFSWDM3546-E			**WT**	37	**LBS**						
SPEC	35E4735G184G1			**ENCL**	TENV							
SER #				**CC**	010A	**IP**	69					
HP	1			**MAG CUR**	2.5/1.25							
VOLTS	230/460					**NEMA NOM. EFF**	85.5					
AMPS	3.34/1.67					**PF**	66					
RATING	40C AMB-CONT											
RPM	1770				**MAX RPM**	2700						
FRAME	56C	**HZ**	60	**CODE**	N	**CLASS**	H					
SER.F.	1.15	**SF AMP**	3.5/1.75		**PH**	3	**DES**	B				
DE	6205		**ODE**	6205								
LUBRICATION	POLYREX EM											
ID LOGO	**INVERTER TYPE**		**VPWM**		**CHP**	60	**TO**	90	1.5:1			
ID LOGO	**WK2**	0.159	**CT**	15	**TO**	60	4:1					
ID LOGO	**SL HZ**	1	**VT**	3	**TO**	60	20:1					
						QR						
YR												

Parts List

Part number	Description	Quantity
SA396278	SA 35E4735G184G1	1.000 ea
RA387086	RA 35E4735G184G1	1.000 ea
35CB1017A01	35/36 MID SECT - 3 PC. CONDUIT BOX 1/2 N	1.000 ea
HA3424S48	STUD - M6X1.0 THDS X 3.00"	1.000 ea
RM1070A81	O-RING, -043 VITON/FKM .070CS X 3.489ID	1.000 ea
35CB1513A01	35-36-37 MACH. LID - 3 PC. CONDUIT BOX	1.000 ea
11XW1032G08	10-32 X .50, TAPTITE II, HEX WSHR SLTD U	1.000 ea
HW3001B02	BRASS CUP WASHER W/GROUND SYMBOL TAB,	1.000 ea
35EP1940A03	FRONT TENV 205 BRG (STAINLESS)	1.000 ea
RM1070A25	O-RING, VITON/FKM .070CS X 6.190ID	1.000 ea
HW4500S33	1/8 NPT STAINLESS #304 SS PLUG	4.000 ea
HW5100A05	WVY WSHR F/205 & 304 BRGS	1.000 ea
35EP1935A02	PULLEY 56C/143-5TC ENCL 205 BRG	1.000 ea
RM1070A25	O-RING, VITON/FKM .070CS X 6.190ID	1.000 ea
HW4600G01	.984X1.499X.25 VITON SLICK SERIES LIP	1.000 ea
HW4600E99	25 X 42 X 6 AFX SEAL, GRAPHITE INFUSED V	1.000 ea
HW4500S33	1/8 NPT STAINLESS #304 SS PLUG	4.000 ea
RM1070A26	O-RING,4.5MM I.D.X1.5MM C.S. (VITON)	4.000 ea
RM1070A81	O-RING, -043 VITON/FKM .070CS X 3.489ID	1.000 ea
HW2502D13	SS KEY, 3/16 SQ X 1.375	1.000 ea
HA7000A04	KEY RETAINER 0.625 DIA SHAFTS	1.000 ea
MJ5001A27	32220KN GRAY SEALER *MIN BUY 4 QTS=1GAL	0.005 qt
MJ5004A93	FOOD GRADE (H1 RATED) ANTISEIZE THRD COM	0.005 ea
HA1025A21	WSHR,FELT .125" THK	1.000 ea
HA5027A09	DRAIN KIT,(2)HA4002A03 BAGGED W/LABEL	1.000 ea
MJ1000A02	GREASE, POLYREX EM EXXON	0.050 lb
WD5603A01	KIT, CLOSED-END LEAD SPLICE (18-14GA)	1.000 ea
HA3100FS25	THRUBOLT, 10-32 X 9.500 SS FOOD SAFE	4.000 ea
36PA1000	PKG GRP, PRINT PK1016A08	1.000 ea
MN416A01	TAG-INSTAL-MAINT no wire (2500 bx)11/25	1.000 ea
FE-0000007	ZRTG FE ASSEMBLY	1.000 ea

PE-0000010	ZRTG PE ASSEMBLY	1.000 ea

AC Induction Motor Performance Data
Record # 87470
Typical performance - not guaranteed values

Winding: 35WGG184-R004	**Type:** 3522M	**Enclosure:** TENV

Nameplate Data				**460 V, 60 Hz: High Voltage Connection**	
Rated Output (HP)			1	**Full Load Torque**	2.99 LB-FT
Volts			230/460	**Start Configuration**	direct on line
Full Load Amps			3.34/1.67	**Breakdown Torque**	16.6 LB-FT
R.P.M.			1770	**Pull-up Torque**	7.42 LB-FT
Hz	60	**Phase**	3	**Locked-rotor Torque**	10.32 LB-FT
NEMA Design Code	B	**KVA Code**	N	**Starting Current**	16.1 A
Service Factor (S.F.)			1.15	**No-load Current**	1.23 A
NEMA Nom. Eff.	85.5	**Power Factor**	66	**Line-line Res. @ 25ºC**	14.4 Ω
Rating - Duty			40C AMB-CONT	**Temp. Rise @ Rated Load**	63°C
S.F. Amps				**Temp. Rise @ S.F. Load**	71°C
				Locked-rotor Power Factor	59.4
				Rotor inertia	0.159 lb-ft²

Load Characteristics 460 V, 60 Hz, 1 HP

% of Rated Load	**25**	**50**	**75**	**100**	**125**	**150**	**S.F.**
Power Factor	27	43	56	66	73	78	72
Efficiency	70.8	81.2	84.5	85.9	85.8	85.2	85.5
Speed	1793	1786	1781	1773	1766	1758	1768
Line amperes	1.25	1.34	1.49	1.67	1.87	2.12	1.75

ABB Motors and Mechanical Inc.

WINDING # 35WGG184

1 HP 3 PH 60 HZ 1770 RPM 460 V 3522M

Typical performance - not guaranteed values.

TORQUES(LB-FT): PO=16.6 PU=7.42 LR=10.32 LRA=16.1

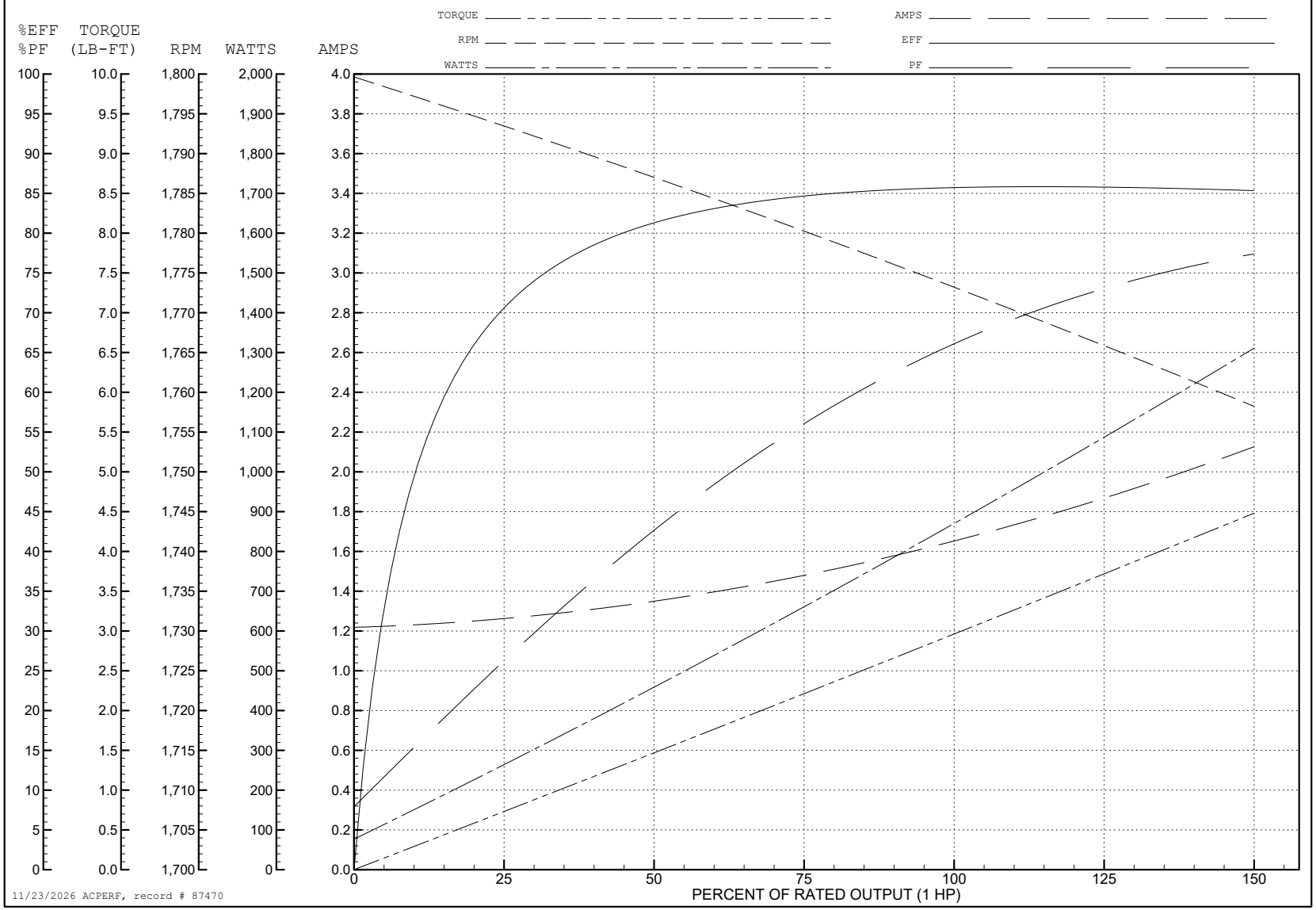

11/23/2026 ACPERF, record # 87470

AC Induction Motor Performance Data
Record # 89717
Typical performance - not guaranteed values

Winding: 35WGG184-R010	**Type:** 3522M	**Enclosure:** TENV

Nameplate Data				**460 V, 60 Hz: High Voltage Connection**	
Rated Output (HP)			1	**Full Load Torque**	2.99 LB-FT
Volts			208-230/460	**Start Configuration**	direct on line
Full Load Amps			3.3-3.34/1.67	**Breakdown Torque**	16.6 LB-FT
R.P.M.			1770	**Pull-up Torque**	7.42 LB-FT
Hz	60	**Phase**	3	**Locked-rotor Torque**	10.32 LB-FT
NEMA Design Code	B	**KVA Code**	N	**Starting Current**	16.1 A
Service Factor (S.F.)			1.15	**No-load Current**	1.23 A
NEMA Nom. Eff.	85.5	**Power Factor**	66	**Line-line Res. @ 25ºC**	14.4 Ω
Rating - Duty			65C AMB-CONT	**Temp. Rise @ Rated Load**	63°C
S.F. Amps			3.6-3.5/1.75	**Temp. Rise @ S.F. Load**	71°C
				Locked-rotor Power Factor	59.3666
				Rotor inertia	0.159 lb-ft²

Load Characteristics 460 V, 60 Hz, 1 HP

% of Rated Load	**25**	**50**	**75**	**100**	**125**	**150**	**S.F.**
Power Factor	27	43	56	66	73	78	70
Efficiency	70.8	81.2	84.5	85.9	85.8	85.2	85.8
Speed	1793	1786	1781	1773	1766	1758	1769
Line amperes	1.25	1.34	1.49	1.67	1.87	2.12	1.79

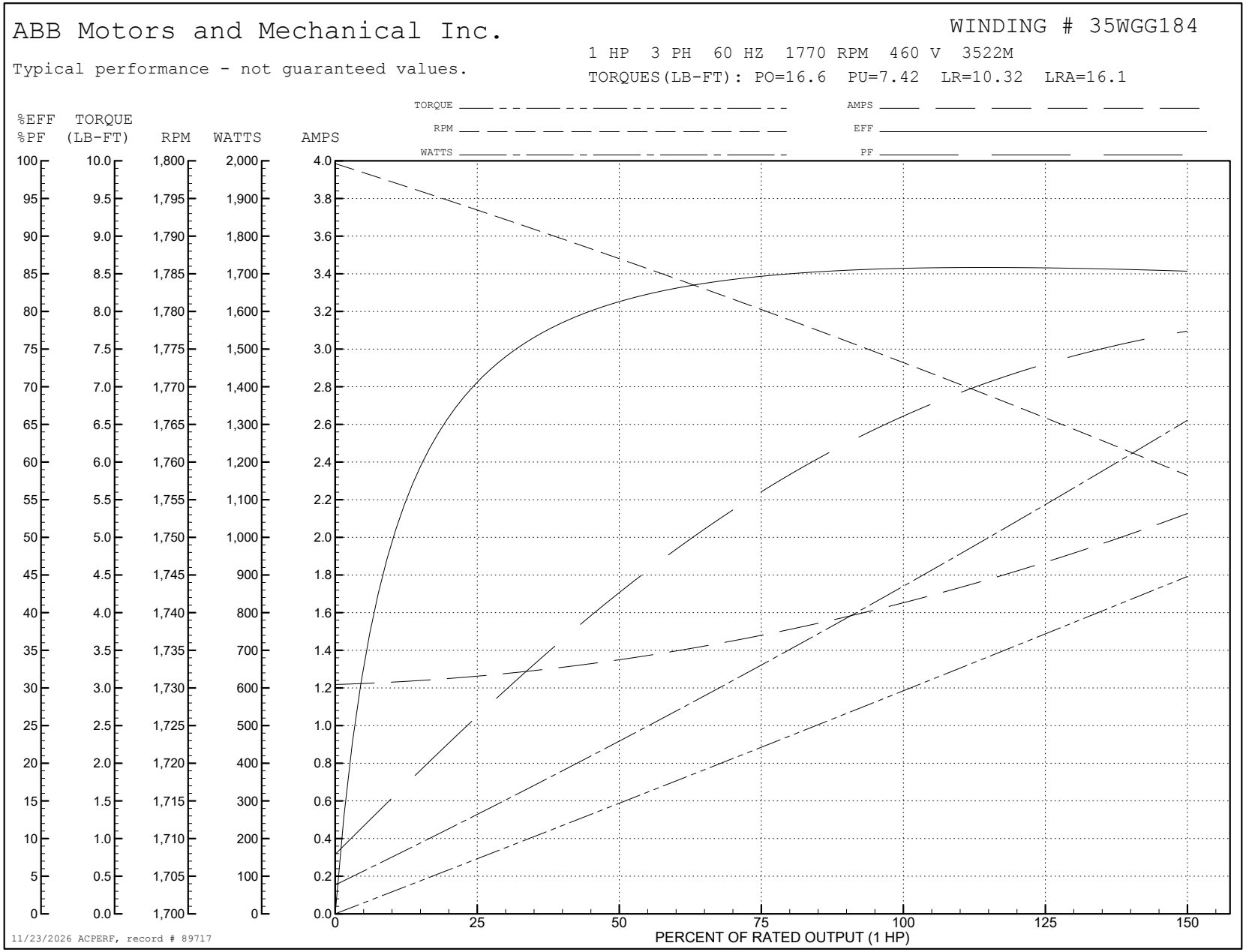
ABB Motors and Mechanical Inc.
WINDING # 35WGG184
1 HP 3 PH 60 HZ 1770 RPM 460 V 3522M
Typical performance - not guaranteed values.
TORQUES(LB-FT): PO=16.6 PU=7.42 LR=10.32 LRA=16.1
TORQUE
RPM
WATTS
AMPS
EFF
PF
%EFF %PF
TORQUE (LB-FT)
RPM
WATTS
AMPS
PERCENT OF RATED OUTPUT (1 HP)
11/23/2026 ACPERF, record # 89717

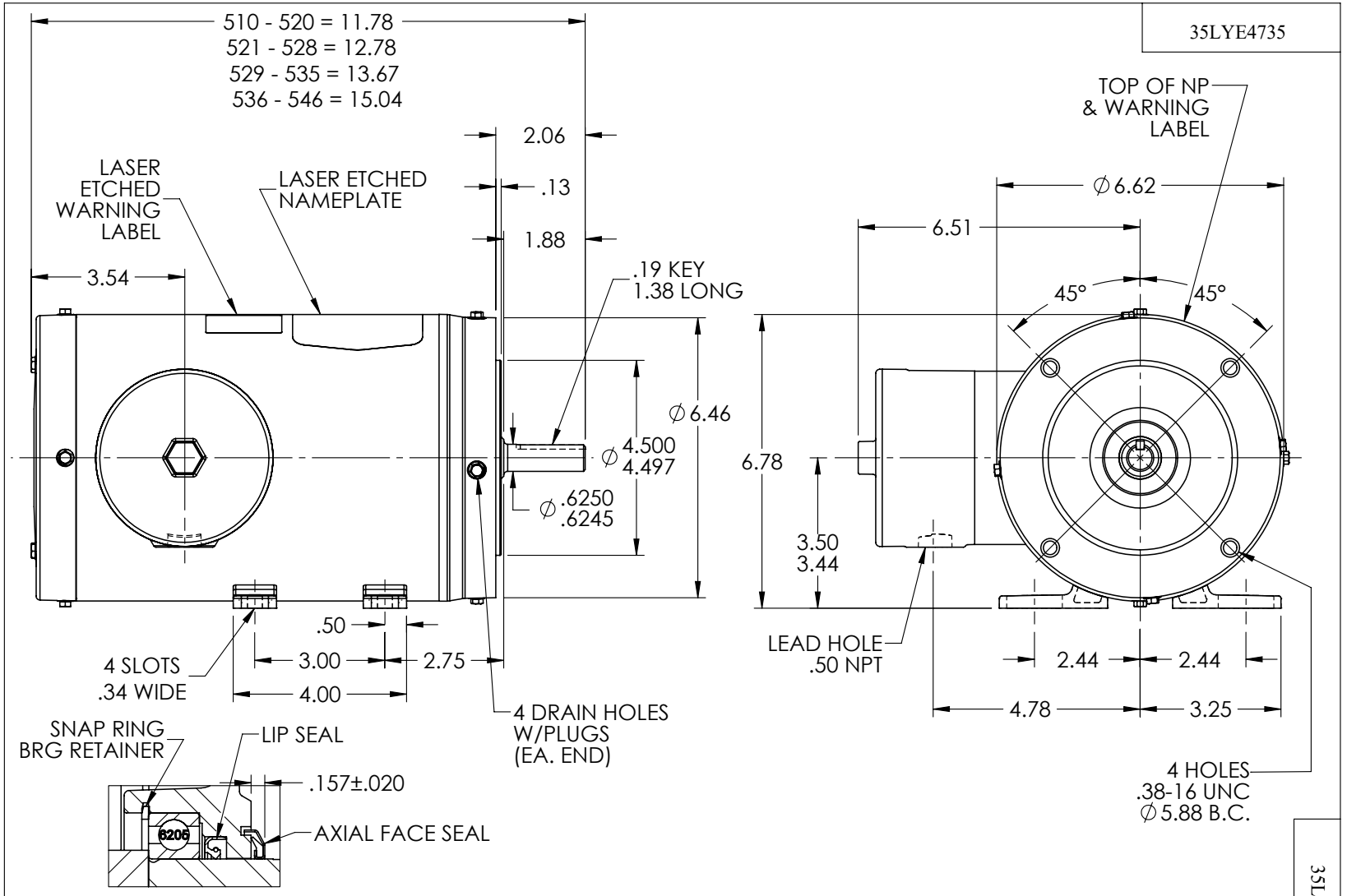
35LYE4735
510 - 520 = 11.78
521 - 528 = 12.78
529 - 535 = 13.67
536 - 546 = 15.04
2.06
.13
1.88
LASER ETCHED WARNING LABEL
LASER ETCHED NAMEPLATE
3.54
.19 KEY 1.38 LONG
∅6.46
∅4.500 4.497
∅.6250 .6245
.50
3.00
2.75
4.00
4 SLOTS .34 WIDE
4 DRAIN HOLES W/PLUGS (EA. END)
SNAP RING BRG RETAINER
LIP SEAL
.157±.020
AXIAL FACE SEAL
6206
PULLEY END DETAIL
TOP OF NP & WARNING LABEL
∅6.62
6.51
45°
45°
6.78
3.50 3.44
LEAD HOLE .50 NPT
2.44
2.44
4.78
3.25
4 HOLES .38-16 UNC ∅5.88 B.C.
CUSTOMER IS RESPONSIBLE FOR DETERMINING THAT THE PRODUCT WILL PERFORM SUITABLY IN THE INTENDED APPLICATION
REV. DESC: ADD DIM TO AXIAL SEAL LOCATION
REV: E
VERSION: 05
REVISED: 11:46:52 07/23/2026
TDR: 000001276312
BALDOR - RELIANCE®
35LYE4735
MODEL NO. 35LYE4735
REF: -
BY: USALMAZ
STD HORZ 56C TENV 35M WD11/12
35LYE4735
35LYE4735

CD0005

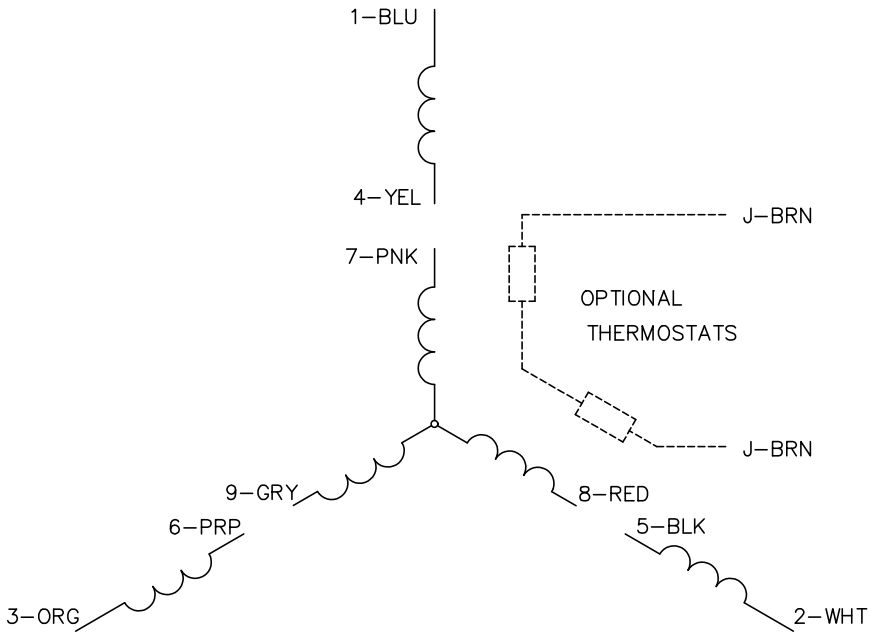

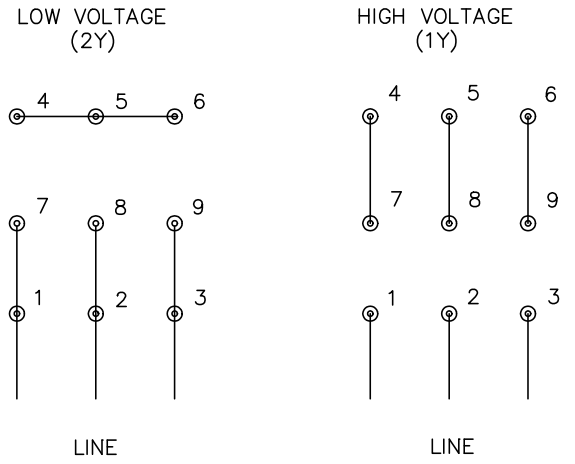

NOTES:

1. INTERCHANGE ANY TWO LINE LEADS TO REVERSE ROTATION.
2. OPTIONAL THERMOSTATS ARE PROVIDED WHEN SPECIFIED.
3. ACTUAL NUMBER OF INTERNAL PARALLEL CIRCUITS MAY BE A MULTIPLE OF THOSE SHOWN ABOVE.
4. LEAD COLORS ARE OPTIONAL. LEADS MUST ALWAYS BE NUMBERED AS SHOWN.

CD0005

REV. DESC: REVISE TO SHOW OPTIONAL COLORS			BALDOR ELECTRIC Co.
REV. LTR: E	BY: JLP	REVISED: 01/19/99 10:15	TDR: 0171435
CD0005		FILE: AAA00005140	MDL: –
		MTL: –	3PH, DV, 9 LEADS