ABB BALDOR RELIANCE

Customer information packet

CM3542

.75HP, 1725RPM, 3PH, 60HZ, 56C, 3420M, TEFC, F1
Class - None
Division - Not Applicable

Copyright © All product information within this document is subject to ABB Motors and Mechanical Inc. copyright © protection, unless otherwise noted.
11/23/2026 2:38:26 AM

Specifications

Enclosure	TEFC
Frame	56C
Frame Material	Steel
Frequency	60.00 Hz
Haz Area Class and Group	None
Haz Area Division	Not Applicable
Motor Letter Type	Three Phase
Output @ Frequency	.750 HP @ 60 HZ
Phase	3
Synchronous Speed @ Frequency	1800 RPM @ 60 HZ
Voltage @ Frequency	208.0 V @ 60 HZ
	230.0 V @ 60 HZ
	460.0 V @ 60 HZ
Agency Approvals	C UR US
	CURUS
Ambient Temperature	40 °C
Auxiliary Box	NO AUXILLARY BOX
Auxiliary Box Lead Termination	None
Base Indicator	Rigid
Bearing Grease Type	Polyrex EM (-20F +300F)
Blower	None
Current @ Voltage	3.200 A @ 208.0 V
	3.000 A @ 230.0 V
	1.500 A @ 460.0 V
Design Code	B
Drip Cover	No Drip Cover
Duty Rating	CONT
Efficiency @ 100% Load	75.5 %
Electrically Isolated Bearing	Not Electrically Isolated
Feedback Device	NO FEEDBACK
Front Shaft Indicator	None
Heater Indicator	No Heater

Part Detail

Revision	E
Type	AC
Mech. spec.	34A062
Base	
Status	PRD/A
Elec. spec.	34WGR707
Layout	34LYA062
Eff. date	12-30-2024
CD Diagram	CD0005
Poles	04
Leads	9#18
Proprietary	False
Created date	11-19-2020

High Voltage Full Load Amps	1.5 a
Insulation Class	B
Inverter Code	Not Inverter
KVA Code	M
Lifting Lugs	No Lifting Lugs
Locked Bearing Indicator	Locked Bearing
Motor Lead Quantity/Wire Size	9 @ 18 AWG
Motor Lead Termination	Flying Leads
Motor Standards	NEMA
Motor Type	3420M
Mounting Arrangement	F1
Number of Poles	4
Overall Length	11.35 IN
Power Factor	64
Product Family	General Purpose
Pulley End Bearing Type	Ball
Pulley Face Code	C-Face
Pulley Shaft Indicator	Standard
Rodent Screen	None
Service Factor	1.25
Shaft Diameter	0.625 IN
Shaft Ground Indicator	No Shaft Grounding
Shaft Rotation	Reversible
Shaft Slinger Indicator	No Slinger
Speed	1725 rpm
Speed Code	Single Speed
Starting Method	Direct on line
Thermal Device - Bearing	None
Thermal Device - Winding	None
Vibration Sensor Indicator	No Vibration Sensor
Winding Thermal 1	None
Winding Thermal 2	None

Nameplate

NP1256L											
CAT.NO.	CM3542										
SPEC.	34A062R707										
HP	.75										
VOLTS	208-230/460										
AMP	3.2-3/1.5										
RPM	1725										
FRAME	56C		**HZ**	60			**PH**	3			
SER.F.	1.25	**CODE**	M	**DES**	B	**CLASS**		B			
NEMA-NOM-EFF	75.5	**PF**	64								
RATING	40C AMB-CONT										
CC											
DE	6203		**ODE**	6203							
ENCL	TEFC	**SN**									
	SFA 3.6-3.4/1.7										

Parts List

Part number	Description	Quantity
SA387932	SA 34A062R707	1.000 ea
RA378272	RA 34A062R707	1.000 ea
NS2512A01	INSULATOR, CONDUIT BOX X	1.000 ea
34CB3002A	CB CAST W/.88 DIA HOLE	1.000 ea
34GS1029A01	GASKET, CONDUIT BOX	1.000 ea
51XB1016A07	10-16 X 7/16 HXWSSLD SERTYB	2.000 ea
11XW1032G06	10-32 X .38, TAPTITE II, HEX WSHR SLTD U	1.000 ea
34EP3102A01SP	FR ENDPLATE, MACH	1.000 ea
HW5100A03	WAVY WASHER (W1543-017)	1.000 ea
34EP3300A24SP	PU ENDPLATE, MACH	1.000 ea
51XN1032A20	10-32 X 1 1/4 HX WS SL SR	2.000 ea
34FN3002A01SP	EXTERNAL FAN, PLASTIC, .637/.639 HUB W/	1.000 ea
34FH4002A01SP	IEC FH NO GREASER PRIMED	1.000 ea
51XW1032A06	10-32 X .38, TAPTITE II, HEX WSHR SLTD S	3.000 ea
34CB4517	CB LID 4 MTG HOLES .22 DIA STAMPED, FOR	1.000 ea
34GS1031A01	GASKET, FLAT CONDUIT BOX LID (LEXIDE)	1.000 ea
51XW0832A07	8-32 X .44, TAPTITE II, HEX WSHR SLTD SE	4.000 ea
MG1050G01	CELEROL MEDIUM CHARCOAL METALLIC GRAY	0.014 ga
85XU0407S04	4X1/4 U DRIVE PIN STAINLESS	2.000 ea
HA3100A12	THRUBOLT 10-32 X 7.375	4.000 ea
HW2501D13	KEY, 3/16 SQ X 1.375	1.000 ea
HA7000A04	KEY RETAINER 0.625 DIA SHAFTS	1.000 ea
MN416A01	TAG-INSTAL-MAINT no wire (2500 bx)11/25	1.000 ea
LC0005E01	CONN.DIA./WARNING LABEL (LC0005/LB1119N)	1.000 ea
NP1256L	ALUM UL CC INDUSTRIAL MOTOR A60	1.000 ea
34PA1002	PKG GRP, PRINT PK1001A02	1.000 ea

AC Induction Motor Performance Data
Record # 85439
Preliminary Data Sheet

Winding: 34WGR707-R001	**Type:** 3420M	**Enclosure:** TEFC

Nameplate Data			**460 V, 60 Hz: High Voltage Connection**	
Rated Output (HP)		0.75	**Full Load Torque**	2.27 LB-FT
Volts		208-230/460	**Start Configuration**	direct on line
Full Load Amps		3.2-3.0/1.5	**Breakdown Torque**	9.9 LB-FT
R.P.M.		1725	**Pull-up Torque**	7.1 LB-FT
Hz	60 **Phase**	3	**Locked-rotor Torque**	9.2 LB-FT
NEMA Design Code	B **KVA Code**	M	**Starting Current**	9.8 A
Service Factor (S.F.)		1.25	**No-load Current**	1.08 A
NEMA Nom. Eff.	77 **Power Factor**	61	**Line-line Res. @ 25ºC**	21 Ω
Rating - Duty		40C-AMB CONT	**Temp. Rise @ Rated Load**	69°C
S.F. Amps		3.6-3.4/1.7	**Temp. Rise @ S.F. Load**	83°C
			Locked-rotor Power Factor	59.2
			Rotor inertia	0.0476 LB-FT2

Load Characteristics 460 V, 60 Hz, 0.75 HP

% of Rated Load	**25**	**50**	**75**	**100**	**125**	**150**	**S.F.**
Power Factor	29	44	56	66	73	79	73
Efficiency	54.7	68.4	73.5	75.2	75.8	74.9	76.5
Speed	1780	1763	1745	1726	1723	1700	1723
Line amperes	1.09	1.15	1.26	1.4	1.58	1.79	1.58

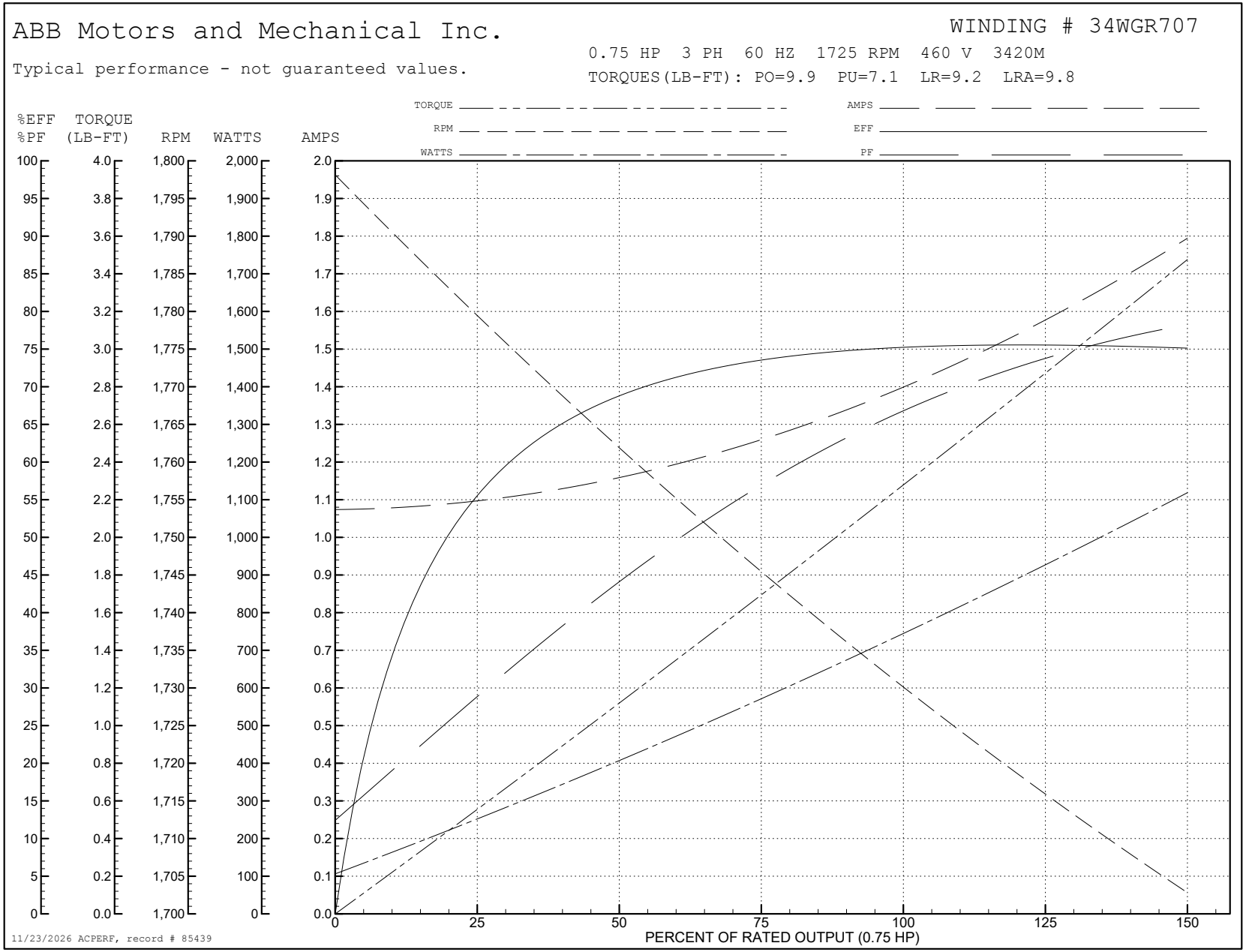
ABB Motors and Mechanical Inc.
WINDING # 34WGR707
Typical performance - not guaranteed values.
0.75 HP 3 PH 60 HZ 1725 RPM 460 V 3420M
TORQUES(LB-FT): PO=9.9 PU=7.1 LR=9.2 LRA=9.8
TORQUE
RPM
WATTS
AMPS
EFF
PF
%EFF %PF
TORQUE (LB-FT)
RPM
WATTS
AMPS
PERCENT OF RATED OUTPUT (0.75 HP)
11/23/2026 ACPERF, record # 85439

34LYA062

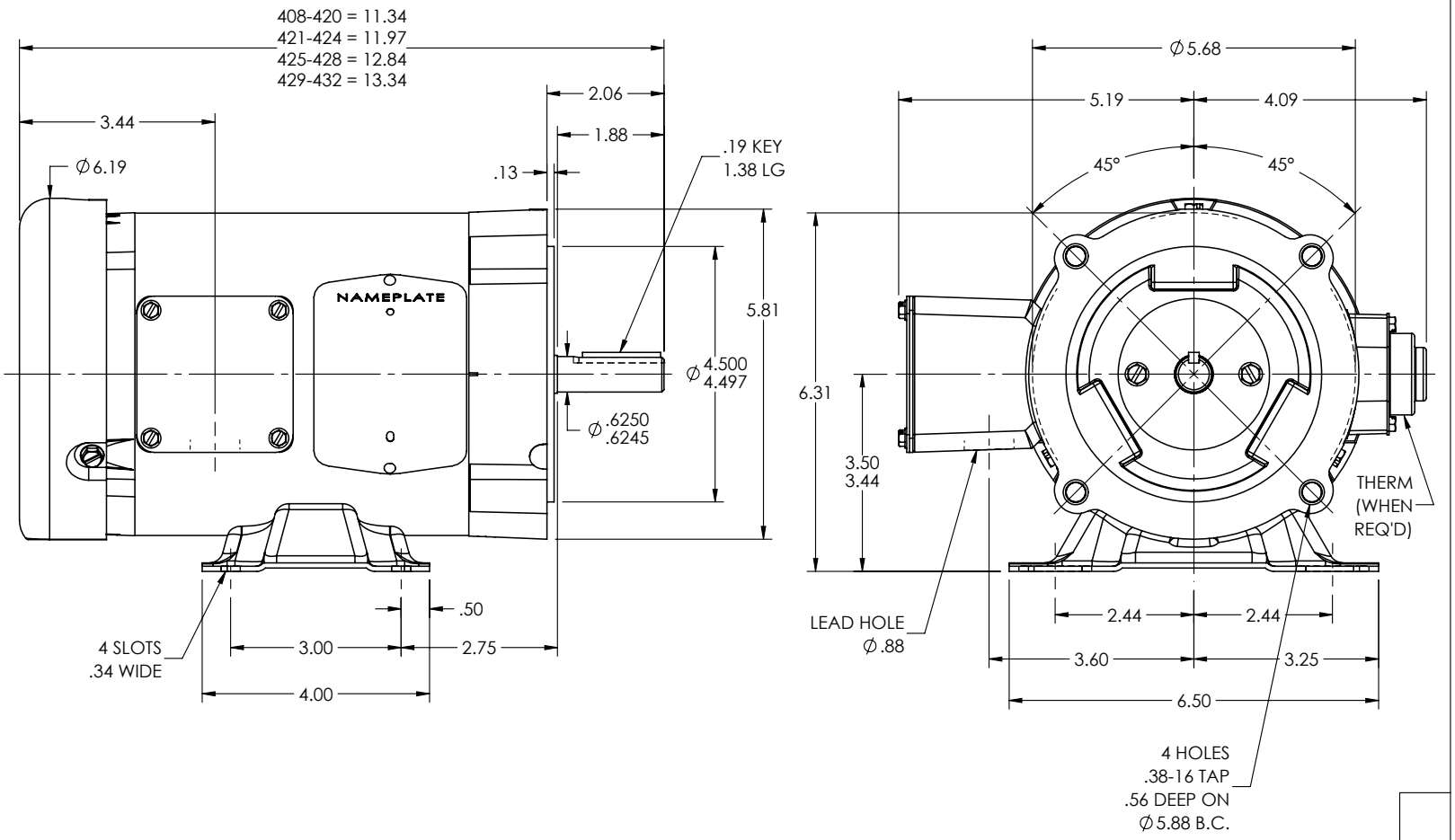

CUSTOMER IS RESPONSIBLE FOR DETERMINING THAT THE PRODUCT WILL PERFORM SUITABLY IN THE INTENDED APPLICATION

REV. DESC: CLEAN UP DIMENSIONING			
REV: U	VERSION: 06	REVISED: 10:13:09 10/31/2024	TDR: 000001243684
34LYA062	MODEL NO. 34LYA062		REF: -
	BY: ENJEFD0		

BALDOR - RELIANCE®

STD HORZ 34M NEMA 56C TEFC

34LYA062

CD0005

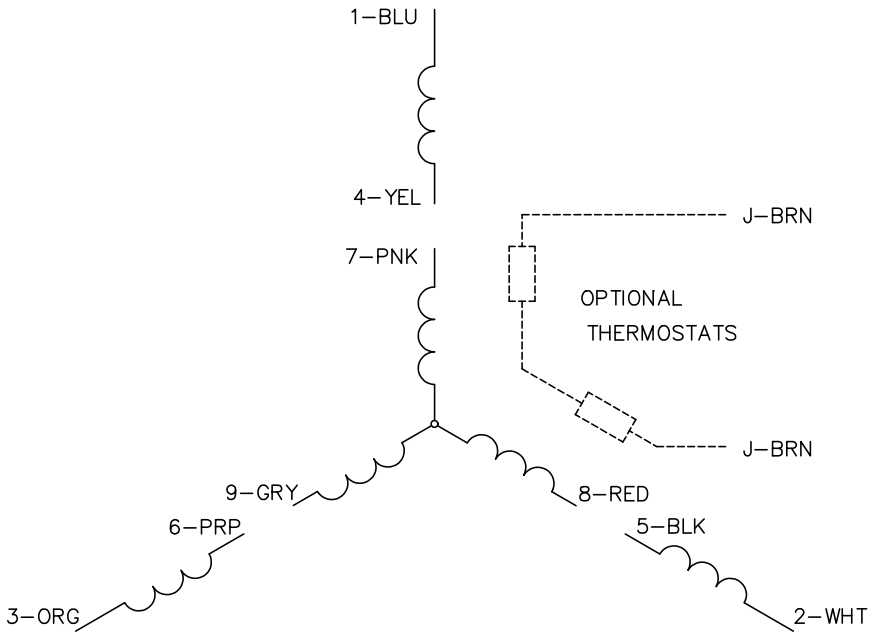

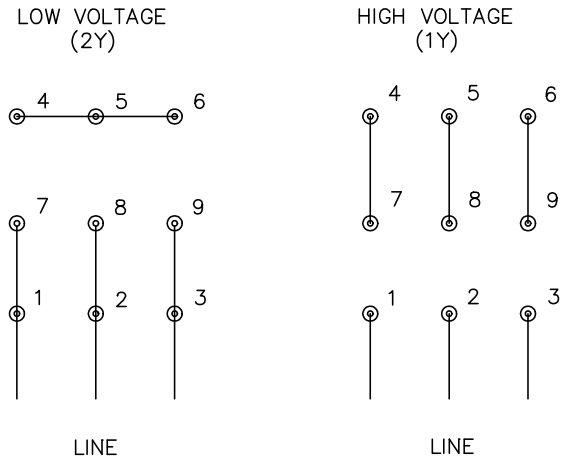

NOTES:

1. INTERCHANGE ANY TWO LINE LEADS TO REVERSE ROTATION.
2. OPTIONAL THERMOSTATS ARE PROVIDED WHEN SPECIFIED.
3. ACTUAL NUMBER OF INTERNAL PARALLEL CIRCUITS MAY BE A MULTIPLE OF THOSE SHOWN ABOVE.
4. LEAD COLORS ARE OPTIONAL. LEADS MUST ALWAYS BE NUMBERED AS SHOWN.

CD0005

REV. DESC: REVISE TO SHOW OPTIONAL COLORS			BALDOR ELECTRIC Co.
REV. LTR: E	BY: JLP	REVISED: 01/19/99 10:15	TDR: 0171435
CD0005		FILE: AAA00005140	MDL: –
		MTL: –	3PH, DV, 9 LEADS