ABB BALDOR RELIANCE

Customer information packet

ECS100A2H3EF4

3HP, 1800RPM, 3PH, 60HZ, 182T, 3624B, TEFC, F1
Class - None
Division - Not Applicable

Copyright © All product information within this document is subject to ABB Motors and Mechanical Inc. copyright © protection, unless otherwise noted.
11/23/2026 3:50:46 AM

Specifications

Enclosure	TEFC
Frame	182T
Frame Material	Steel
Frequency	60.00 Hz
Haz Area Class and Group	None
Haz Area Division	Not Applicable
Motor Letter Type	Brushless Wound Field PM Rotor
Output @ Frequency	3.000 HP @ 60 HZ
Phase	3
Synchronous Speed @ Frequency	1800 RPM @ 60 HZ
Voltage @ Frequency	230.0 V @ 60 HZ
Agency Approvals	WEEE
	BLUETOOTH
Ambient Temperature	40 °C
Auxiliary Box	NO AUXILLARY BOX
Auxiliary Box Lead Termination	None
Base Indicator	Rigid
Bearing Grease Type	Polyrex EM (-20F +300F)
Blower	None
Constant Torque Speed Range	6
Current @ Voltage	7.300 A @ 230.0 V
Design Code	-
Drip Cover	No Drip Cover
Duty Rating	CONT
Efficiency @ 100% Load	92.4 %
Electrically Isolated Bearing	Not Electrically Isolated
Feedback Device	NO FEEDBACK
Heater Indicator	No Heater
High Voltage Full Load Amps	7.3 a
Insulation Class	F
Inverter Code	INVERTER ONLY
KVA Code	-

Part Detail

Revision	-
Type	AC
Mech. spec.	36T259
Base	
Status	PRD/A
Elec. spec.	36WGG004
Layout	36LYT259
Eff. date	12-08-2025
CD Diagram	CD0006B03
Poles	04
Leads	3#16
Proprietary	False
Created date	12-08-2025

Lifting Lugs	Standard Lifting Lugs
Locked Bearing Indicator	Locked Bearing
Motor Lead Quantity/Wire Size	3 @ 16 AWG
Motor Lead Termination	Flying Leads
Motor Standards	NEMA
Motor Type	3624B
Mounting Arrangement	F1
Number of Poles	4
Overall Length	22.25 IN
Power Factor	97
Product Family	General Purpose
Pulley Face Code	Standard
Rodent Screen	None
RoHS Status	ROHS COMPLIANT
Service Factor	1.00
Shaft Diameter	1.125 IN
Shaft Ground Indicator	Shaft Grounding
Shaft Rotation	Reversible
Speed	1800 rpm
Speed Code	Single Speed
Starting Method	Direct on line
Thermal Device - Bearing	None
Thermal Device - Winding	None
Vibration Sensor Indicator	No Vibration Sensor
Winding Thermal 1	None
Winding Thermal 2	None

Nameplate

NP3968A01A01									
CAT.NO.	ECS100A2H3EF4								
SPEC.	36T259G004G1								
FRAME	182T			**ENCL.**	TEFC		**IP**	54	
HP	3		40	**C AMB**		CONT			
NOM. EFF.	92.4	**PF**	97		**SF**	1			
VOLTS	230			**FLA**	7.3				
RPM	1800			**RPM-MAX**		4000			
HZ	60		**PH.**	3	**CLASS**	F			
BEMF (V)	106				**RS (OHMS)**	0.97			
LD (MH)	14.4				**LQ (MH)**	54.4			
VPWM	**CHP**	60	**TO**	133					
CT	6	**TO**	60	**VT**	6	**TO**	60		
MATCHED INV	ECI2A10P5								
DE	6206			**ODE**	6205				
SERIAL #									

NP3978A01						
PART NO.	ECI2A10P5					
U1	240	**PH**	3	**HZ**	60	
I1	9.3	**W/EXT. CHOKE**				7.8
SERIAL #						

Parts List

Part number	Description	Quantity
SA443683	SA 36T259G004G1	1.000 ea
RA436188	RA 36T259G004G1	1.000 ea
ECI2A10P5SP	200-240V, 3.0HP, 10.5A, W/BK CHOP, RTC,	1.000 ea
HW3200A01	3/8-16X3/4 EYEBOLT WELDED F/S	1.000 ea
36EP3104B40	FREP TEFC 36L/M 205 BRG W/ECM CABLE SLOT	1.000 ea
HA4067A01	PUSH IN DRAIN FITTING (BLACK)	1.000 ea
HW5100A05	WVY WSHR F/205 & 304 BRGS	1.000 ea
36EP3100A42	PU EP, LOCKED 206 BRG, NO GRS	1.000 ea
HA4067A01	PUSH IN DRAIN FITTING (BLACK)	1.000 ea
10XN2520A20	1/4-20X 1 1/4 HEX HD X	2.000 ea
HW1001A25	LOCKWASHER 1/4, ZINC PLT .493 OD, .255 I	2.000 ea
XY2520A12	1/4-20 HEX NUT, DIRECTIONAL SERRATIONS	4.000 ea
36FN3000C01SP	EXFN, PLASTIC, 5.25 OD, .912 ID	1.000 ea
51XB1214A16	12-14X1.00 HXWSSLD SERTYB	1.000 ea
36FH3005	36 FRAME ODE ECM FAN HOUSING	1.000 ea
51XW1032A08	10/32X1/2 HXWSHR HD, SL, SERATED	3.000 ea
GS0027	ECM GASKET,36 ODE MOUNT,HEATSINK TO FAN	1.000 ea
HS0053A00	36 FRAME ODE ECM HEATSINK MACHINING	1.000 ea
MH4001F02	C-2 GLASS SLV-YELLOW #2 (per ft)	0.500 ft
GS0027	ECM GASKET,36 ODE MOUNT,HEATSINK TO FAN	1.000 ea
WD4100A66	HEYCO #3835 KNOCKOUT PLUG(KOS-LT 3/4) BL	2.000 ea
WD4100A30	HEYCO #3833 RUBBER PLUG KOS-LT - 1/2	2.000 ea
11XW1032A10	10-32 X .62, TAPTITE II, HEX WSHR SLTD	4.000 ea
36CB3500A00	36 FRAME ODE ECM PLASTIC COVER WITH FOAM	1.000 ea
15XN1032A10	SCREW PAN HD 10-32 X .625 (PHILLIPS)	4.000 ea
MJ5002A02	NON-CORROSIVE SILICONE, DOW 748, 10.3 OZ	0.001 ea
HW4600B36SP	V-RING SLINGER 1.188 X 1.380 X .24 VITON	1.000 ea
HW2501E16	KEY, 1/4 SQ X 1.750	1.000 ea
HA7000A02	KEY RETAINER RING, 1 1/8 DIA, 1 3/8 DIA	1.000 ea
MJ1000A02	GREASE, POLYREX EM EXXON	0.050 lb
HA3101A25	THRUBOLT 1/4-20 X 11.000 OHIO ROD	4.000 ea

15XN0832A12	SCREW, 8/32 X 3/4" PAN HDPHIL, MS	3.000 ea
MG1050G01	CELEROL MEDIUM CHARCOAL METALLIC GRAY	0.022 ga
NP3968A01A01	NP LABEL WEE, SH GND, C-UL-US, QR, ECS	1.000 ea
NP3978A01	MYLAR BALDOR-RELIANCE SYNC IPM DRIVE 4.3	1.000 ea
G0PA1000	PKG GRP, PRINT PK1026A06	1.000 ea
MN451	EC Titanium Quick Start 06/22	1.000 ea
LB1624	COMBINED WARNING LABEL, ISO/ANSI PICTOGR	1.000 ea
PE-0000001	ZRTG PE ASSEMBLY	1.000 ea

36LYT259

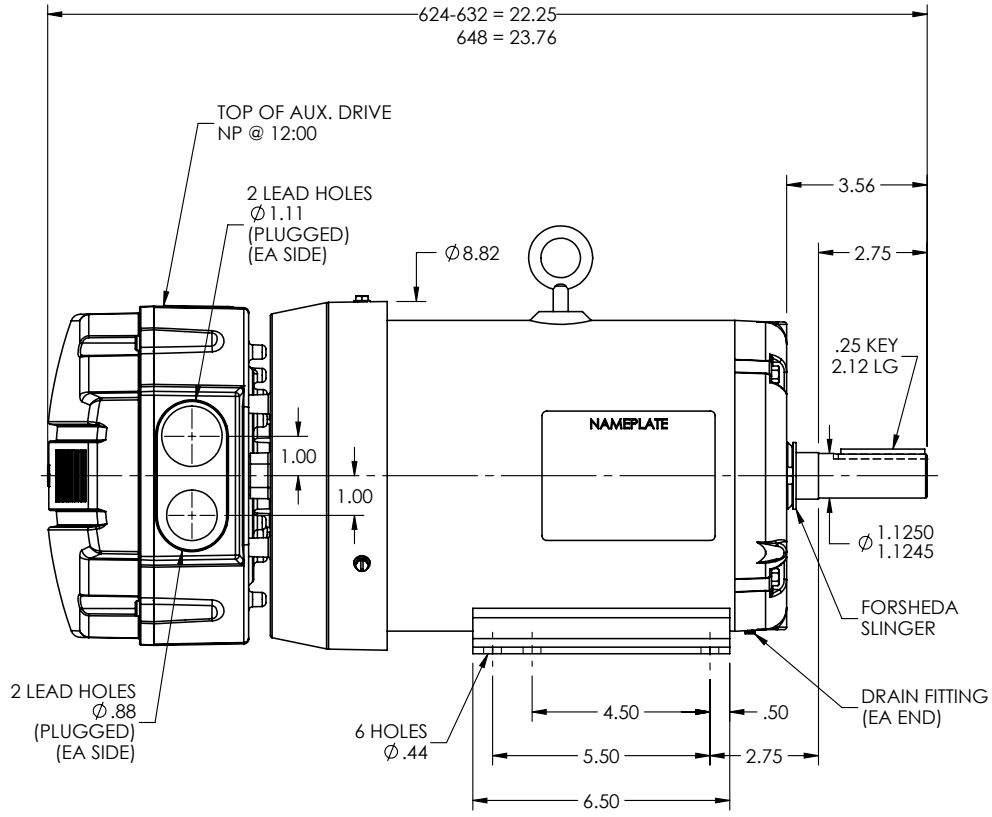

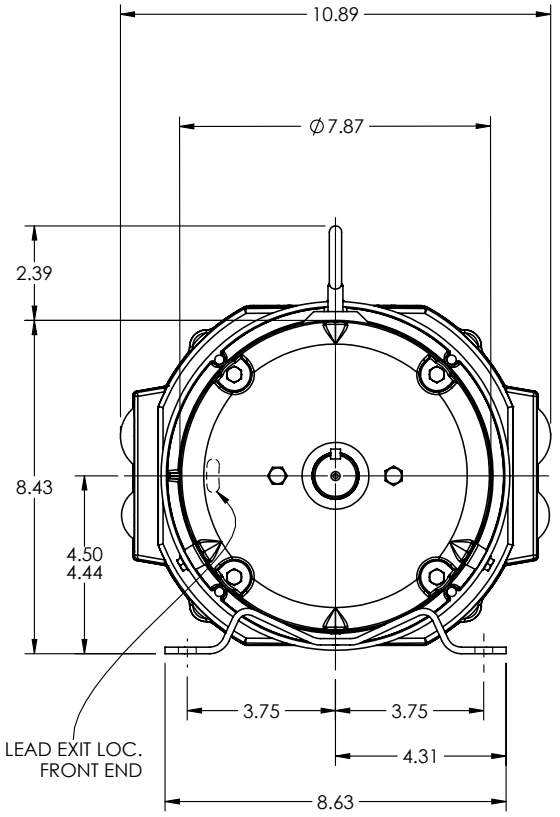

REV. DESC: UPDATE DRAWING GRAPHICS			
REV: E	VERSION: 05	REVISED: 09:37:18 03/16/2022	TDR: 000001187699
	MODEL NO. 36LYT259		REF: -
	BY: ENJEFD0	Material: -	

BALDOR

HOR 182-4T TEFC B ODE MOUNT DRV INT SH GND ECS

36LYT259

36CB3500A00

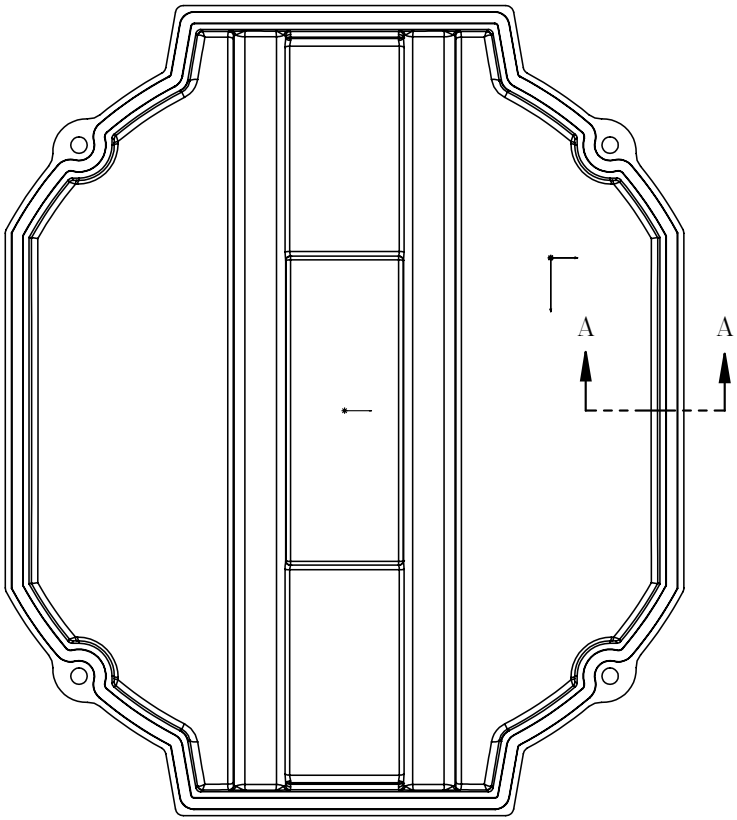

MATERIAL: RAMPF, RAKU-PUR 32-3280-51L

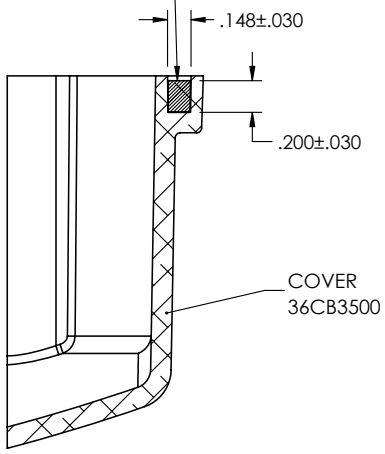

SECTION A–A

36CB3500A00

REV. DESC: UPDATE MATERIAL			
REV: A	VERSION: 01	REVISED: 10:45:08 03/29/2019	TDR: 000001101646
	MODEL NO. 36CB3500A00		REF: -
	BY: ENMARS0	Material: -	

BALDOR - RELIANCE®

36 FRAME ODE ECM COVER WITH FOAM SEAL

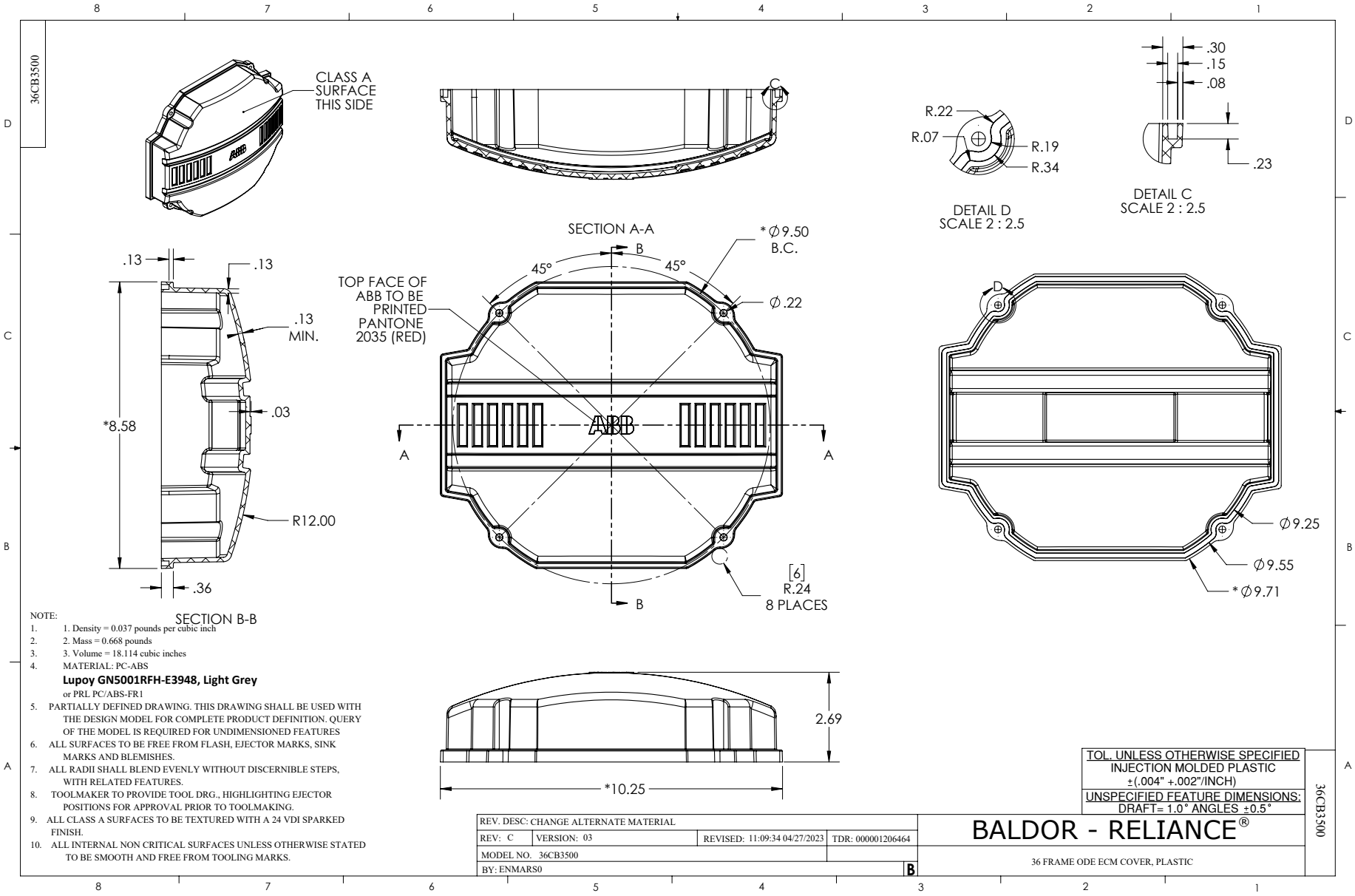
36CB3500
CLASS A SURFACE THIS SIDE
SECTION A-A
SECTION B-B
DETAIL D SCALE 2 : 2.5
DETAIL C SCALE 2 : 2.5
TOP FACE OF ABB TO BE PRINTED PANTONE 2035 (RED)
*Ø9.50 B.C.
Ø.22
45°
45°
.13
.13
.13 MIN.
.03
*8.58
R12.00
.36
R.22
R.07
R.19
R.34
.30
.15
.08
.23
Ø9.25
Ø9.55
*Ø9.71
[6] R.24 8 PLACES
2.69
*10.25
NOTE:
1. 1. Density = 0.037 pounds per cubic inch
2. 2. Mass = 0.668 pounds
3. 3. Volume = 18.114 cubic inches
4. MATERIAL: PC-ABS
Lupoy GN5001RFH-E3948, Light Grey
or PRL PC/ABS-FR1
5. PARTIALLY DEFINED DRAWING. THIS DRAWING SHALL BE USED WITH THE DESIGN MODEL FOR COMPLETE PRODUCT DEFINITION. QUERY OF THE MODEL IS REQUIRED FOR UNDIMENSIONED FEATURES
6. ALL SURFACES TO BE FREE FROM FLASH, EJECTOR MARKS, SINK MARKS AND BLEMISHES.
7. ALL RADII SHALL BLEND EVENLY WITHOUT DISCERNIBLE STEPS, WITH RELATED FEATURES.
8. TOOLMAKER TO PROVIDE TOOL DRG., HIGHLIGHTING EJECTOR POSITIONS FOR APPROVAL PRIOR TO TOOLMAKING.
9. ALL CLASS A SURFACES TO BE TEXTURED WITH A 24 VDI SPARKED FINISH.
10. ALL INTERNAL NON CRITICAL SURFACES UNLESS OTHERWISE STATED TO BE SMOOTH AND FREE FROM TOOLING MARKS.
TOL. UNLESS OTHERWISE SPECIFIED
INJECTION MOLDED PLASTIC
±(.004" +.002"/INCH)
UNSPECIFIED FEATURE DIMENSIONS:
DRAFT= 1.0° ANGLES ±0.5°
REV. DESC: CHANGE ALTERNATE MATERIAL
REV: C VERSION: 03 REVISED: 11:09:34 04/27/2023 TDR: 000001206464
MODEL NO. 36CB3500
BY: ENMARS0
B
BALDOR - RELIANCE®
36 FRAME ODE ECM COVER, PLASTIC
36CB3500

CD0006B03

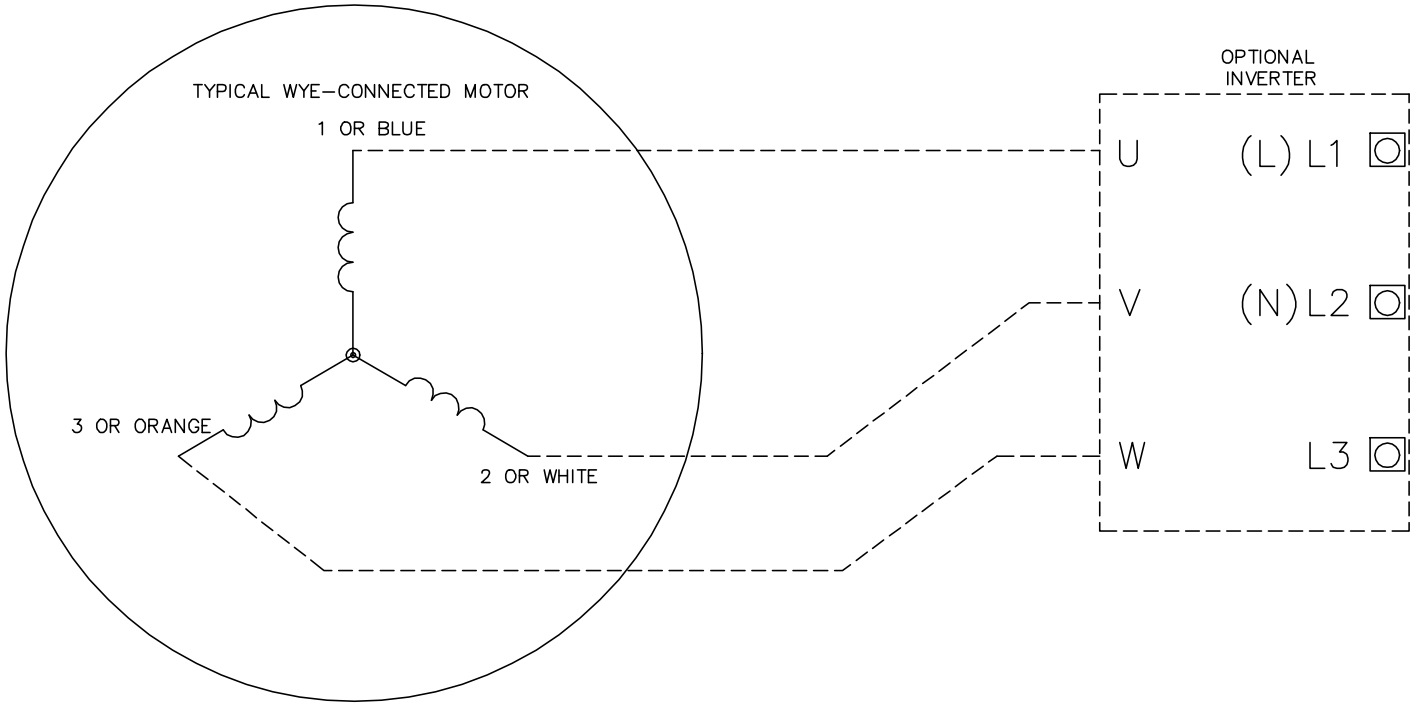

NOTES:

1. INTERCHANGE ANY TWO LINE LEADS TO REVERSE ROTATION.
2. ACTUAL NUMBER OF INTERNAL PARALLEL CIRCUITS MAY VARY.

CD0006B03

REV. DESC: CHANGE LEAD COLORS TO BLUE WHITE ORANGE		
REV. LTR: A	VERSION: 01	TDR: 000001158598
FILE: \AAA\00252\917	REVISED: 11:01:03 01/19/2021	BY: ENMARSO
MTL: –		

BALDOR - RELIANCE®

3PH, SV, 3 LEADS, WYE CONNECTED, ECS

SH 1 of 1