ABB BALDOR RELIANCE

Customer information packet

ECS100A4H1DF4

1HP, 1800RPM, 3PH, 60HZ, 143T, 3516B, TEFC, F1
Class - None
Division - Not Applicable

Copyright © All product information within this document is subject to ABB Motors and Mechanical Inc. copyright © protection, unless otherwise noted.
11/24/2026 8:16:26 AM

Specifications

Enclosure	TEFC
Frame	143T
Frame Material	Steel
Frequency	60.00 Hz
Haz Area Class and Group	None
Haz Area Division	Not Applicable
Motor Letter Type	Brushless Wound Field PM Rotor
Output @ Frequency	1.000 HP @ 60 HZ
Phase	3
Synchronous Speed @ Frequency	1800 RPM @ 60 HZ
Voltage @ Frequency	460.0 V @ 60 HZ
Agency Approvals	BLUETOOTH CULUS WEEE
Ambient Temperature	40 °C
Auxiliary Box	NO AUXILLARY BOX
Auxiliary Box Lead Termination	None
Base Indicator	Rigid
Bearing Grease Type	Polyrex EM (-20F +300F)
Blower	None
Constant Torque Speed Range	6
Current @ Voltage	1.050 A @ 460.0 V
Design Code	-
Drip Cover	No Drip Cover
Duty Rating	CONT
Efficiency @ 100% Load	90.3 %
Electrically Isolated Bearing	Not Electrically Isolated
Feedback Device	NO FEEDBACK
Heater Indicator	No Heater
High Voltage Full Load Amps	1.1 a
Insulation Class	F
Inverter Code	03

Part Detail

Revision	J
Type	AC
Mech. spec.	35E5247
Base	
Status	PRD/A
Elec. spec.	35WGG965
Layout	35LYE5247
Eff. date	07-27-2026
CD Diagram	CD0006B03
Poles	04
Leads	3#14 13" LONG LEADS Y
Proprietary	False
Created date	05-06-2024

KVA Code	-
Lifting Lugs	No Lifting Lugs
Locked Bearing Indicator	Locked Bearing
Motor Lead Quantity/Wire Size	3 @ 14 AWG
Motor Lead Termination	Flying Leads
Motor Standards	NEMA
Motor Type	3516B
Mounting Arrangement	F1
Number of Poles	4
Overall Length	16.71 IN
Power Factor	97
Product Family	General Purpose
Pulley Face Code	Standard
Rodent Screen	None
Service Factor	1.00
Shaft Diameter	0.875 IN
Shaft Ground Indicator	Shaft Grounding
Shaft Rotation	Reversible
Speed	1800 rpm
Speed Code	Single Speed
Starting Method	Direct on line
Thermal Device - Bearing	None
Thermal Device - Winding	None
Vibration Sensor Indicator	No Vibration Sensor
Winding Thermal 1	None
Winding Thermal 2	None

Nameplate

NP3968A01A01									
CAT.NO.	ECS100A4H1DF4								
SPEC.	35E5247G965G1								
FRAME	143T			**ENCL.**	TEFC		**IP**	54	
HP	1		40	**C AMB**		CONT			
NOM. EFF.	89.5	**PF**	97		**SF**	1			
VOLTS	460			**FLA**	1.2				
RPM	1800			**RPM-MAX**		3600			
HZ	60		**PH.**	3	**CLASS**	F			
BEMF (V)	269				**RS (OHMS)**	19.7			
LD (MH)	117				**LQ (MH)**	500			
VPWM	**CHP**	60	**TO**	120					
CT	6	**TO**	60	**VT**	6	**TO**	60		
MATCHED INV	ECI4A2P2								
DE	6205			**ODE**	6203				
SERIAL #									

NP3978A01						
PART NO.	ECI4A2P2					
U1	480	**PH**	3	**HZ**	60	
I1	1.8	**W/EXT. CHOKE**			1.7	
SERIAL #						

Parts List

Part number	Description	Quantity
SA427917	SA 35E5247G965G1	1.000 ea
RA420070	RA 35E5247G965G1	1.000 ea
ECI4A2P2SP	380-480V, 1.0HP, 2.2A, NO BK CHOP, RTC,	1.000 ea
35EP3123C00	MASTER DE,205 BRG,.998 SH,#26 DRN,LCK BR	1.000 ea
HA4067A01	PUSH IN DRAIN FITTING (BLACK)	1.000 ea
51XN1032A18	10-32 X 1 1/8 HX WS SL SR (ESKAY)	2.000 ea
XY1032A02	10-32 HEX NUT DIRECTIONAL SERRATION	4.000 ea
34FN3002A01SP	EXTERNAL FAN, PLASTIC, .637/.639 HUB W/	1.000 ea
35FH3005	35 FRAME ODE ECM FAN HOUSING	1.000 ea
15XN1032A08	SCREW PAN HD 10-32 X 1/2 (PHILLIPS)	4.000 ea
GS0026	ECM GASKET,35 ODE MOUNT, HEATSINK TO FAN	1.000 ea
15XN0832A12	SCREW, 8/32 X 3/4" PAN HDPHIL, MS	3.000 ea
HS0051A00	35 FRAME ODE ECM HEATSINK MACHINING	1.000 ea
11XW1032A10	10-32 X .62, TAPTITE II, HEX WSHR SLTD	4.000 ea
GS0026	ECM GASKET,35 ODE MOUNT, HEATSINK TO FAN	1.000 ea
WD4100A30	HEYCO #3833 RUBBER PLUG KOS-LT - 1/2	4.000 ea
15XN1032A10	SCREW PAN HD 10-32 X .625 (PHILLIPS)	4.000 ea
MJ5002A02	NON-CORROSIVE SILICONE, DOW 748, 10.3 OZ	0.001 ea
HW4600B32SP	V-RING SLINGER 1.000 X 1.540 X .24 VITON	1.000 ea
HW2501D13	KEY, 3/16 SQ X 1.375	1.000 ea
HA7000A01	KEY RETAINER 7/8" DIA SHAFT	1.000 ea
MJ1000A02	GREASE, POLYREX EM EXXON	0.050 lb
35EP3120B01	FREP TEFC 203 BRG ECS W/LEAD SLOT @ 6 (C	1.000 ea
HW5100A03	WAVY WASHER (W1543-017)	1.000 ea
35CB3504A00	35 FRAME ODE ECM PLASTIC COVER WITH FOAM	1.000 ea
HA3100A13	THRUBOLT 10-32 X 7.750	4.000 ea
MG1050G01	CELEROL MEDIUM CHARCOAL METALLIC GRAY	0.017 ga
NP3968A01A01	NP LABEL WEE, SH GND, C-UL-US, QR, ECS	1.000 ea
NP3978A01	MYLAR BALDOR-RELIANCE SYNC IPM DRIVE 4.3	1.000 ea
36PA1001	PKG GRP, PRINT PK1017A07	1.000 ea
MN451	EC Titanium Quick Start 06/22	1.000 ea

PE-0000001	ZRTG PE ASSEMBLY	1.000 ea

Volts	460	Max RPM	3600	Conn Diag.	CD0006B03	Leads	3
Amps	1.05	Max Amps		Cs Diagram	CS1126	BEMF	269
HP	1	VFD#	ECIN4A2P2			LD	117
RPM	1800	S.F.	1.00			LQ	500
Phase/Hz	3/60	Rating	50C AMB-CONT			Rs	19.8095 Meas. L-L

60034-2-3 Motor Performance at Standardized Operating Points

	RPM	% Speed	LB-FT	% Torque	HP	Efficiency	Loss (% FL)	Watts Loss (W)
P1	1618	90%	2.9	100%	0.9	88.2	11.94%	90
P2	900	50%	2.9	100%	0.5	86.0	8.08%	61
P3	450	25%	2.9	100%	0.3	79.2	6.50%	49
P4	1621	90%	1.5	50%	0.5	87.1	6.62%	50
P5	900	50%	1.5	50%	0.2	87.4	3.55%	27
P6	900	50%	0.7	25%	0.1	86.0	2.02%	15
P7	450	25%	0.7	25%	0.1	83.8	1.21%	9

61800-9-2 PDS Performance at Reference Operating Points

	RPM	% Speed	LB-FT	% Torque	HP	System Efficiency	Loss (% FL)	Watts Loss (W)
P1	1799	100%	2.9	100%	1.0	87.0	14.73%	111
P2	900	50%	2.9	100%	0.5	81.0	11.61%	88
P3	300	17%	2.9	100%	0.2	63.2	9.59%	72
P4	1802	100%	1.5	50%	0.5	83.5	9.78%	74
P5	900	50%	1.5	50%	0.2	79.4	6.41%	48
P6	300	17%	1.5	50%	0.1	61.5	5.17%	39
P7	900	50%	0.7	25%	0.1	73.2	4.53%	34
P8	300	17%	0.7	25%	0.0	53.7	3.56%	27

Points not taken in certified order.

Volts	460	Max RPM	3600	Conn Diag.	CD0006B03	Leads	3
Amps	1.05	Max Amps		Cs Diagram	CS1126	BEMF	269
HP	1	VFD #	ECIN4A2P2			LD	117
RPM	1800	S.F.	1.00			LQ	500
Phase/Hz	3/60	Rating	50C AMB-CONT			Rs	19.8095 Meas L-L

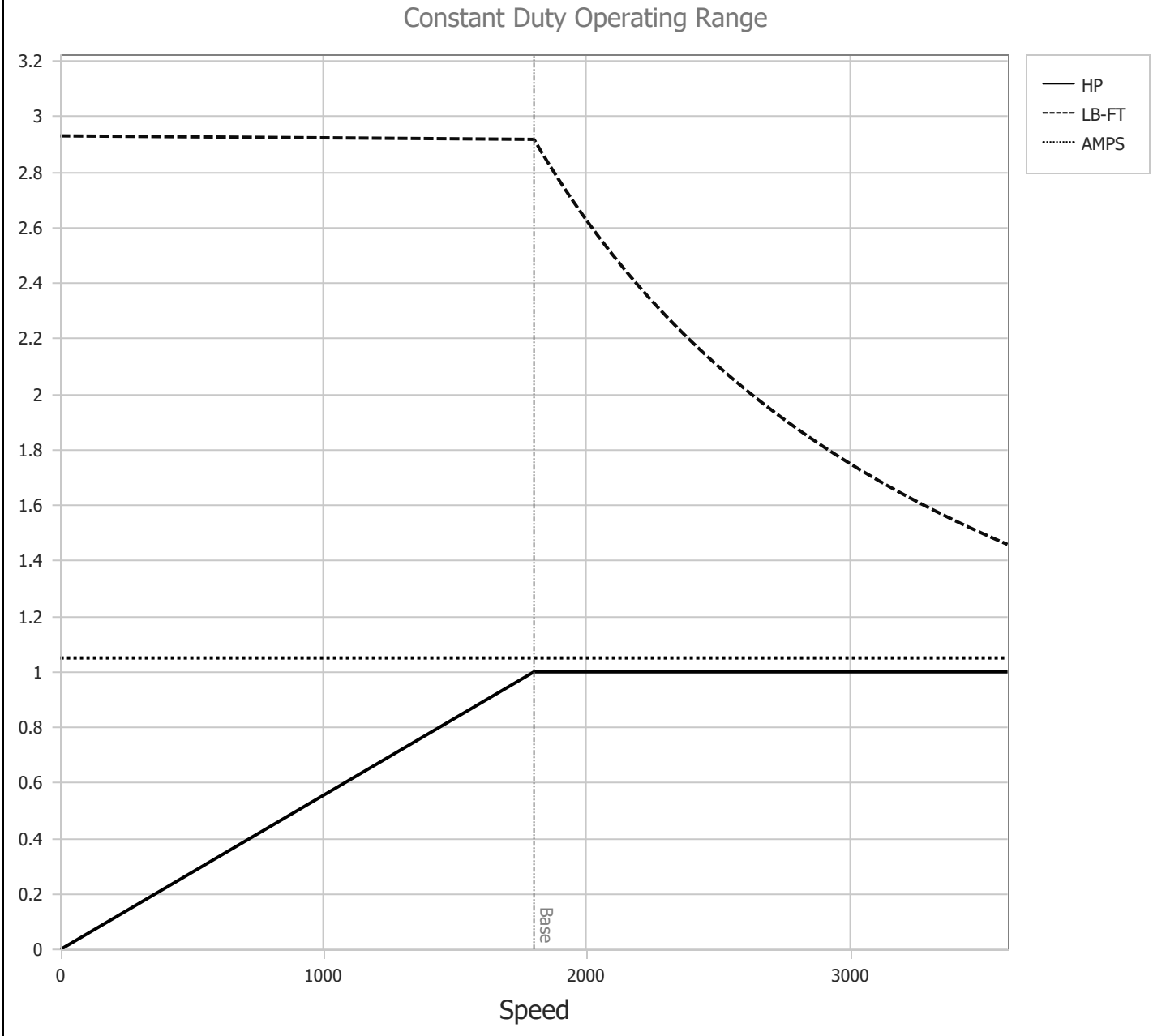

BALDOR • RELIANCE	DR By: R & D CK By: USTOSAN APP By: USWEQUA1 Date: 11/14/2024	**AC MOTOR PERFORMANCE CURVES**	**35WGG965** 35-0000-1623 *Test - 111577*

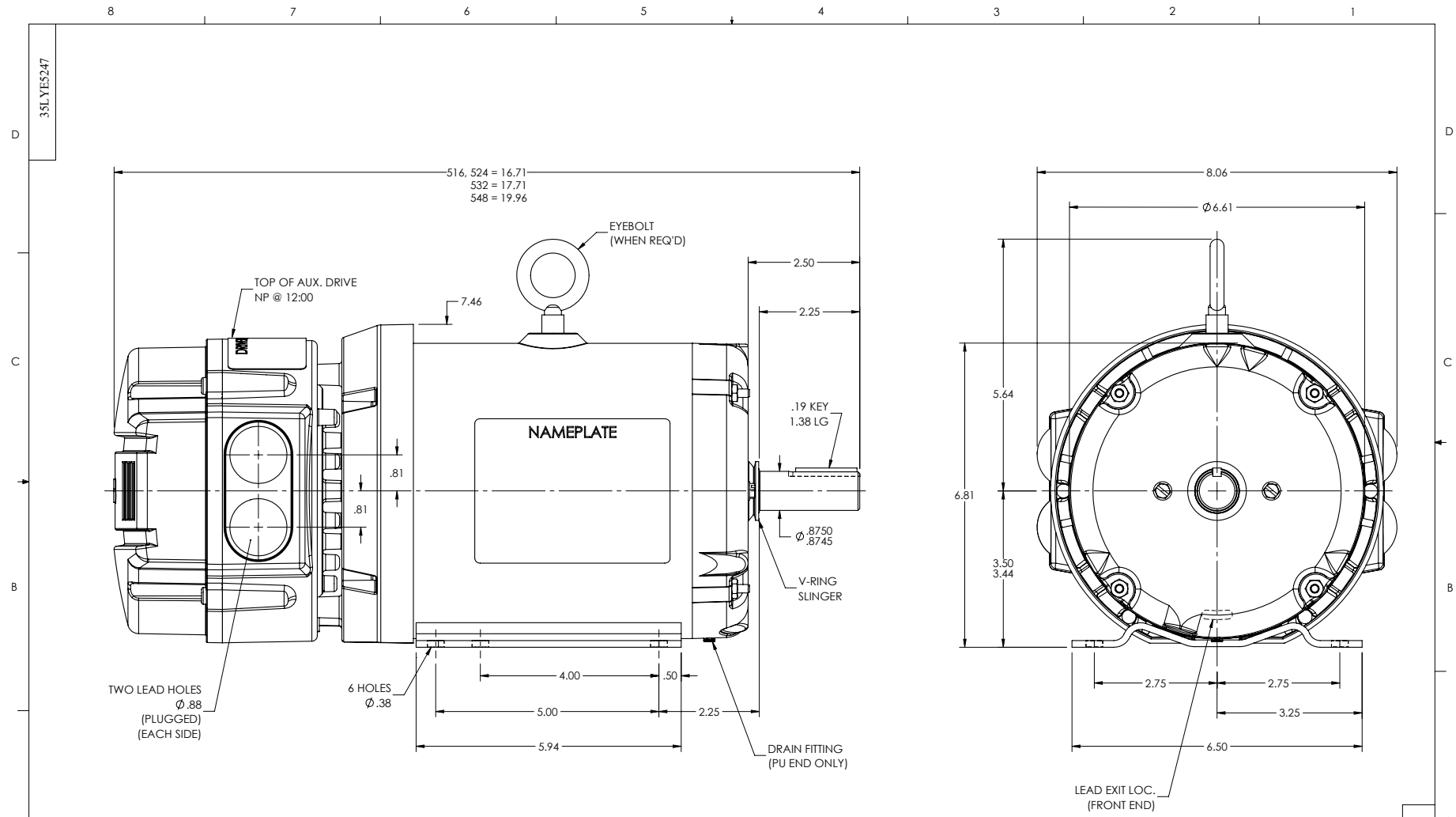
35LYE5247
516, 524 = 16.71
532 = 17.71
548 = 19.96
EYEBOLT
(WHEN REQ'D)
TOP OF AUX. DRIVE
NP @ 12:00
7.46
2.50
2.25
.19 KEY
1.38 LG
NAMEPLATE
.81
.81
Ø .8750
.8745
V-RING
SLINGER
TWO LEAD HOLES
Ø .88
(PLUGGED)
(EACH SIDE)
6 HOLES
Ø .38
4.00
.50
5.00
2.25
5.94
DRAIN FITTING
(PU END ONLY)
8.06
Ø 6.61
5.64
6.81
3.50
3.44
2.75
2.75
3.25
6.50
LEAD EXIT LOC.
(FRONT END)
CUSTOMER IS RESPONSIBLE FOR DETERMINING THAT THE PRODUCT WILL PERFORM SUITABLY IN THE INTENDED APPLICATION
REV. DESC: ADDED EYEBOLT GRAPHICS
REV: K
VERSION: 10
REVISED: 09:04:43 03/19/2026
TDR: 000001272816
MODEL NO. 35LYE5247
REF: -
BY: ENJEFD0
B
BALDOR - RELIANCE®
HOR 143-5T TEFC B ODE MOUNT DRV INT SH GND ECS
35LYE5247

CD0006B03

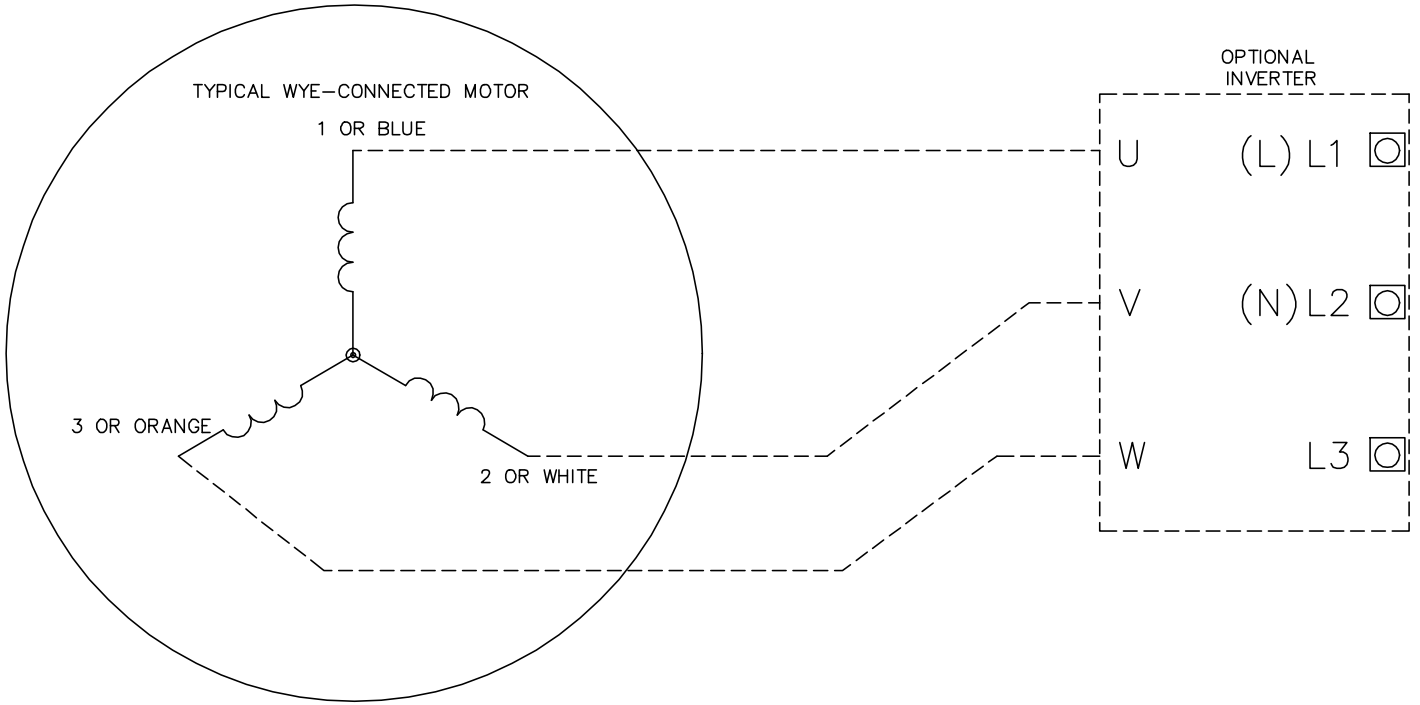

NOTES:

1. INTERCHANGE ANY TWO LINE LEADS TO REVERSE ROTATION.
2. ACTUAL NUMBER OF INTERNAL PARALLEL CIRCUITS MAY VARY.

CD0006B03

REV. DESC: CHANGE LEAD COLORS TO BLUE WHITE ORANGE		
REV. LTR: A	VERSION: 01	TDR: 000001158598
FILE: \AAA\00252\917	REVISED: 11:01:03 01/19/2021	BY: ENMARSO
MTL: –		

BALDOR - RELIANCE®

3PH, SV, 3 LEADS, WYE CONNECTED, ECS

SH 1 of 1