ABB BALDOR RELIANCE

Customer information packet

ECS100A4H3EF4

3HP, 1800RPM, 3PH, 60HZ, 182T, TEFC, AXIAL
Class - None
Division - Not Applicable

Copyright © All product information within this document is subject to ABB Motors and Mechanical Inc. copyright © protection, unless otherwise noted.
11/23/2026 12:06:37 AM

Specifications

Enclosure	TEFC
Frame	182T
Frame Material	Steel
Frequency	60.00 Hz
Haz Area Class and Group	None
Haz Area Division	Not Applicable
Motor Letter Type	Three Phase
Phase	3
Agency Approvals	UL
	WEEE
Auxiliary Box	NO AUXILLARY BOX
Auxiliary Box Lead Termination	None
Base Indicator	Rigid
Bearing Grease Type	Polyrex EM (-20F +300F)
Blower	None
Constant Torque Speed Range	6
Design Code	B
Drip Cover	No Drip Cover
Electrically Isolated Bearing	Not Electrically Isolated
Feedback Device	NO FEEDBACK
Heater Indicator	No Heater
Inverter Code	Inverter Duty
IP Rating	NONE
Lifting Lugs	Standard Lifting Lugs
Locked Bearing Indicator	Locked Bearing
Motor Lead Quantity/Wire Size	3 @ 16 AWG
Motor Lead Termination	Flying Leads
Motor Standards	NEMA
Motor Type	3624B
Mounting Arrangement	F1
Number of Poles	4
Overall Length	22.25 IN

Part Detail

Revision	P
Type	AC
Mech. spec.	36T259
Base	
Status	PRD/A
Elec. spec.	36WGL109
Layout	36LYT259
Eff. date	09-28-2026
CD Diagram	CD0006
Poles	04
Leads	3#16
Proprietary	False
Created date	12-12-2019

Product Family	General Purpose
Pulley Face Code	Standard
Rodent Screen	None
RoHS Status	ROHS COMPLIANT
Shaft Diameter	1.125 IN
Shaft Ground Indicator	Shaft Grounding
Shaft Rotation	Reversible
Speed Code	Single Speed
Starting Method	INVERTER SPECIAL
Thermal Device - Bearing	None
Thermal Device - Winding	None
Vibration Sensor Indicator	No Vibration Sensor
Winding Thermal 1	None
Winding Thermal 2	None

BALDOR·RELIANCE

EC-Titanium™

CAT. NO.	ECS100A4H3EF4						
SPEC.	36T259L109G1				YR	***	
FRAME	182T		ENCL.	TEFC	IP54		
HP	3	RATING	40C AMB-CONT				
NOM. EFF.	92.8%	PF	96.6%	SF	1.00		
VOLTS	460		FLA	3.7			
RPM	1800	RPM MAX	4000				
HZ	60	PH.	3	CLASS	F		
BEMF (V)	212		Rs (Ω)	3.880			
Ld (mH)	57.7		Lq (mH)	218			
INV TYP	VPWM	CHP	60 TO 133 HZ				
	CT	6 TO 60 HZ	VT	1 TO 60 HZ			
MATCHED INV	EC14A4P1						
BEARING	DE	6206	ODE	6205			
SERIAL#	***						

FERRITE ASSISTED
SYNCHRONOUS RELUCTANCE MOTOR
FOR INVERTER USE ONLY

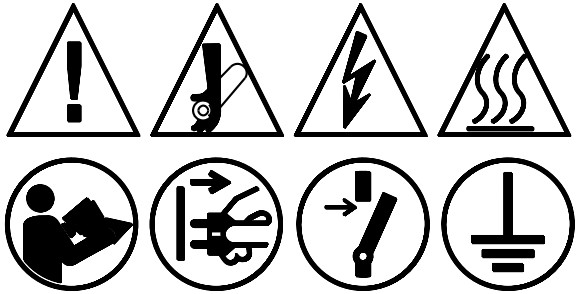

PERMANENT MAGNET MOTOR. WHEN SHAFT IS ROTATED, VOLTAGE WILL BE GENERATED AT THE MOTOR TERMINALS.
MOTEUR Á AIMANT PERMANENT. LORSQUE L'ARBRE TOURNE, UNE TENSION SERA GÉNÉRÉE AUX BORNES DU MOTEUR.

BALDOR-RELIANCE
SHAFT GROUNDING BRUSH INSTALLED

c UL us LISTED
E46145

ELECTRONICALLY PROTECTED MOTOR
FOR INDUSTRIAL USE

ABB MOTORS AND MECHANICAL INC.
5711 R.S. BOREHAM JR. ST., FORT SMITH, AR. MFG IN U.S.A.

BALDOR • RELIANCE

EC-Titanium™

PART NO.	EC14A4P1				
U1	480	PH	3	HZ	60
I1 MAX	4.7	W/EXT. CHOKE			4.0
SERIAL #	***				



POWER DOWN FOR
5 MINUTES BEFORE
REMOVING COVER

METTRE HORS TENSION
PENDANT 5 MINUTES
AVANT DE RETIRER LE
COUVERCLE

ABB MOTORS AND MECHANICAL
INC. FORT SMITH, AR.
MFG. IN U.S.A.

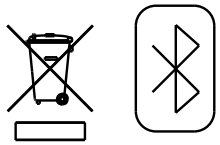

Parts List

Part number	Description	Quantity
SA377220	SA 36T259L109G1	1.000 ea
RA367139	RA 36T259L109G1	1.000 ea
ECI4A4P1SP	380-480V, 2.0HP, 4.1A, NO BK CHOP, RTC,	1.000 ea
HW3200A01	3/8-16X3/4 EYEBOLT WELDED F/S	1.000 ea
36EP3104B40	FREP TEFC 36L/M 205 BRG W/ECM CABLE SLOT	1.000 ea
HA4067A01	PUSH IN DRAIN FITTING (BLACK)	1.000 ea
HW5100A05	WVY WSHR F/205 & 304 BRGS	1.000 ea
BP5338A06	SHAFT GRD BRUSH, RB4014A05 RETAINER RING	1.000 ea
36EP3100A42	PU EP, LOCKED 206 BRG, NO GRS	1.000 ea
HA4067A01	PUSH IN DRAIN FITTING (BLACK)	1.000 ea
10XN2520A20	1/4-20X 1 1/4 HEX HD X	2.000 ea
HW1001A25	LOCKWASHER 1/4, ZINC PLT .493 OD, .255 I	2.000 ea
XY2520A12	1/4-20 HEX NUT, DIRECTIONAL SERRATIONS	4.000 ea
36FN3000C01SP	EXFN, PLASTIC, 5.25 OD, .912 ID	1.000 ea
51XB1214A16	12-14X1.00 HXWSSLD SERTYB	1.000 ea
36FH3005	36 FRAME ODE ECM FAN HOUSING	1.000 ea
51XW1032A08	10/32X1/2 HXWSHR HD, SL, SERATED	3.000 ea
GS0027	ECM GASKET,36 ODE MOUNT,HEATSINK TO FAN	1.000 ea
WD4100A66	HEYCO #3835 KNOCKOUT PLUG(KOS-LT 3/4) BL	2.000 ea
HS0053A00	36 FRAME ODE ECM HEATSINK MACHINING	1.000 ea
MH4001F02	C-2 GLASS SLV-YELLOW #2 (per ft)	0.500 ft
GS0027	ECM GASKET,36 ODE MOUNT,HEATSINK TO FAN	1.000 ea
WD4100A30	HEYCO #3833 RUBBER PLUG KOS-LT - 1/2	2.000 ea
11XW1032A10	10-32 X .62, TAPTITE II, HEX WSHR SLTD	4.000 ea
36CB3500A00	36 FRAME ODE ECM PLASTIC COVER WITH FOAM	1.000 ea
15XN1032A10	SCREW PAN HD 10-32 X .625 (PHILLIPS)	4.000 ea
MJ5002A02	NON-CORROSIVE SILICONE, DOW 748, 10.3 OZ	0.001 ea
HW4600B36SP	V-RING SLINGER 1.188 X 1.380 X .24 VITON	1.000 ea
HW2501E16	KEY, 1/4 SQ X 1.750	1.000 ea
HA7000A02	KEY RETAINER RING, 1 1/8 DIA, 1 3/8 DIA	1.000 ea
MJ1000A02	GREASE, POLYREX EM EXXON	0.050 lb

HA3101A25	THRUBOLT 1/4-20 X 11.000 OHIO ROD	4.000 ea
15XN0832A12	SCREW, 8/32 X 3/4" PAN HDPHIL, MS	3.000 ea
MG1050G01	CELEROL MEDIUM CHARCOAL METALLIC GRAY	0.022 ga
NP3968	MYLAR BLANK 4.375W X 3.375L	1.000 ea
NP3978	MYLAR BLANK 4.375W X 1.75L	1.000 ea
G0PA1000	PKG GRP, PRINT PK1026A06	1.000 ea
MN451	EC Titanium Quick Start 06/22	1.000 ea
PE-0000001	ZRTG PE ASSEMBLY	1.000 ea
LB1624	COMBINED WARNING LABEL, ISO/ANSI PICTOGR	1.000 ea

36LYT259

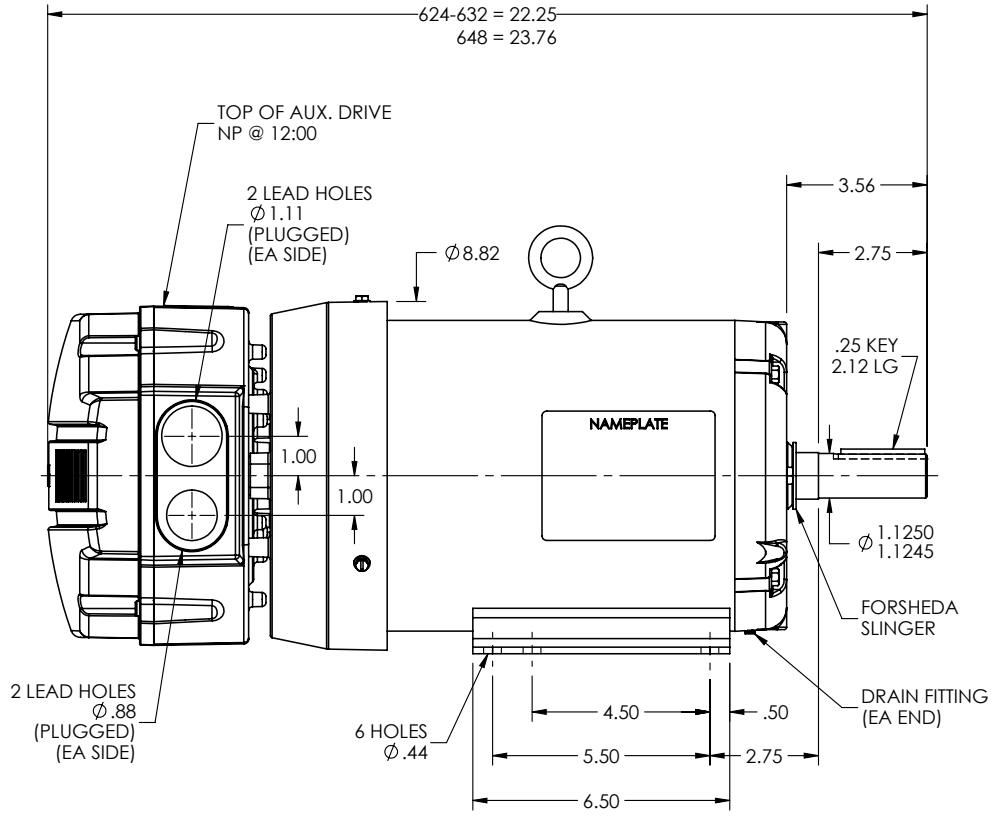

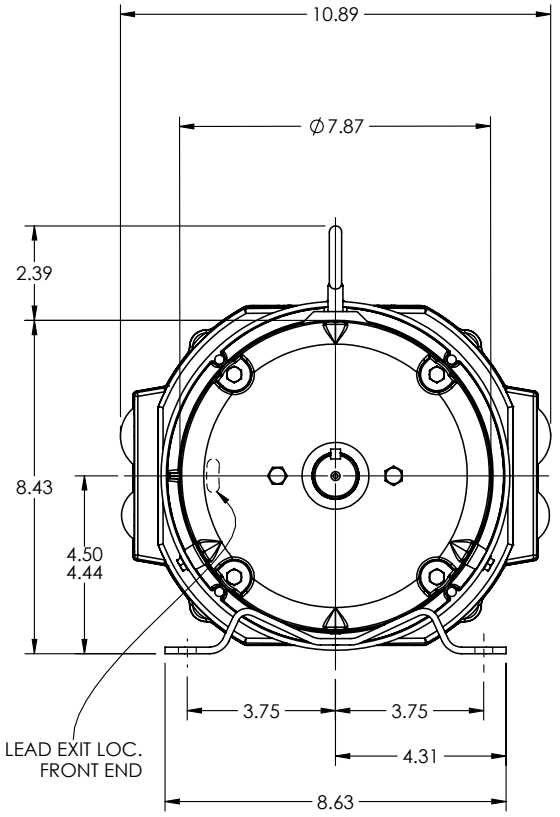

36LYT259

REV. DESC: UPDATE DRAWING GRAPHICS			
REV: E	VERSION: 05	REVISED: 09:37:18 03/16/2022	TDR: 000001187699
	MODEL NO. 36LYT259		REF: -
	BY: ENJEFD0	Material: -	

BALDOR

HOR 182-4T TEFC B ODE MOUNT DRV INT SH GND ECS

36CB3500A00

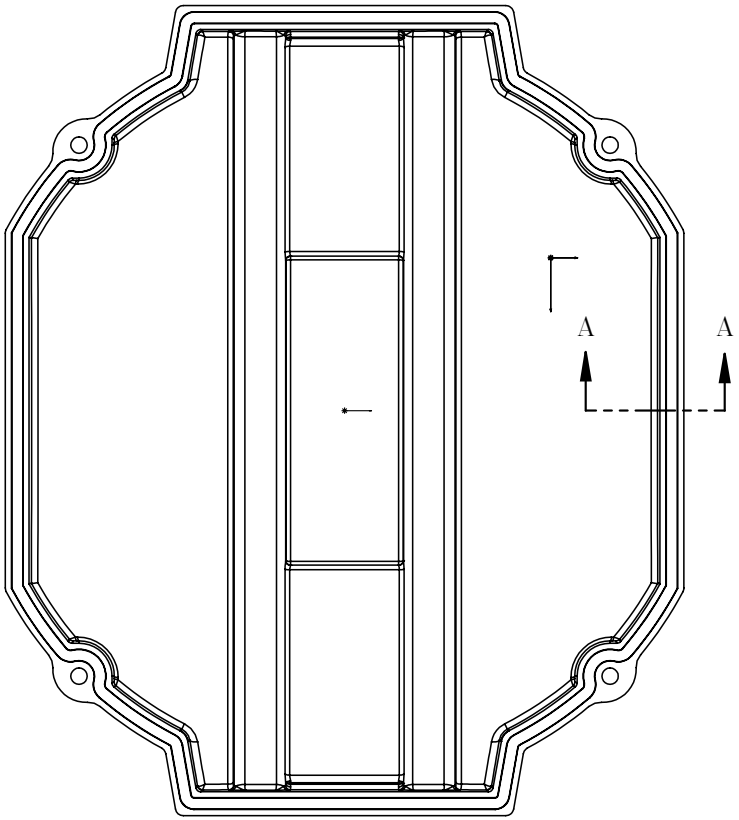

MATERIAL: RAMPF, RAKU-PUR 32-3280-51L

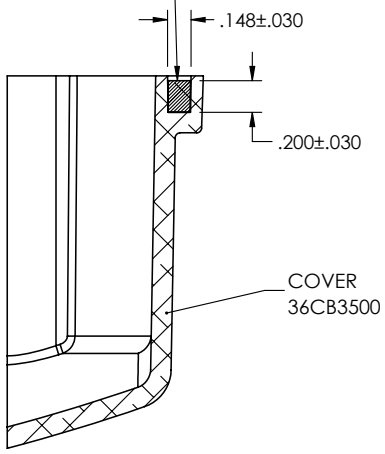

SECTION A–A

36CB3500A00

REV. DESC: UPDATE MATERIAL			
REV: A	VERSION: 01	REVISED: 10:45:08 03/29/2019	TDR: 000001101646
	MODEL NO. 36CB3500A00		REF: -
	BY: ENMARS0	Material: -	

BALDOR - RELIANCE®

36 FRAME ODE ECM COVER WITH FOAM SEAL

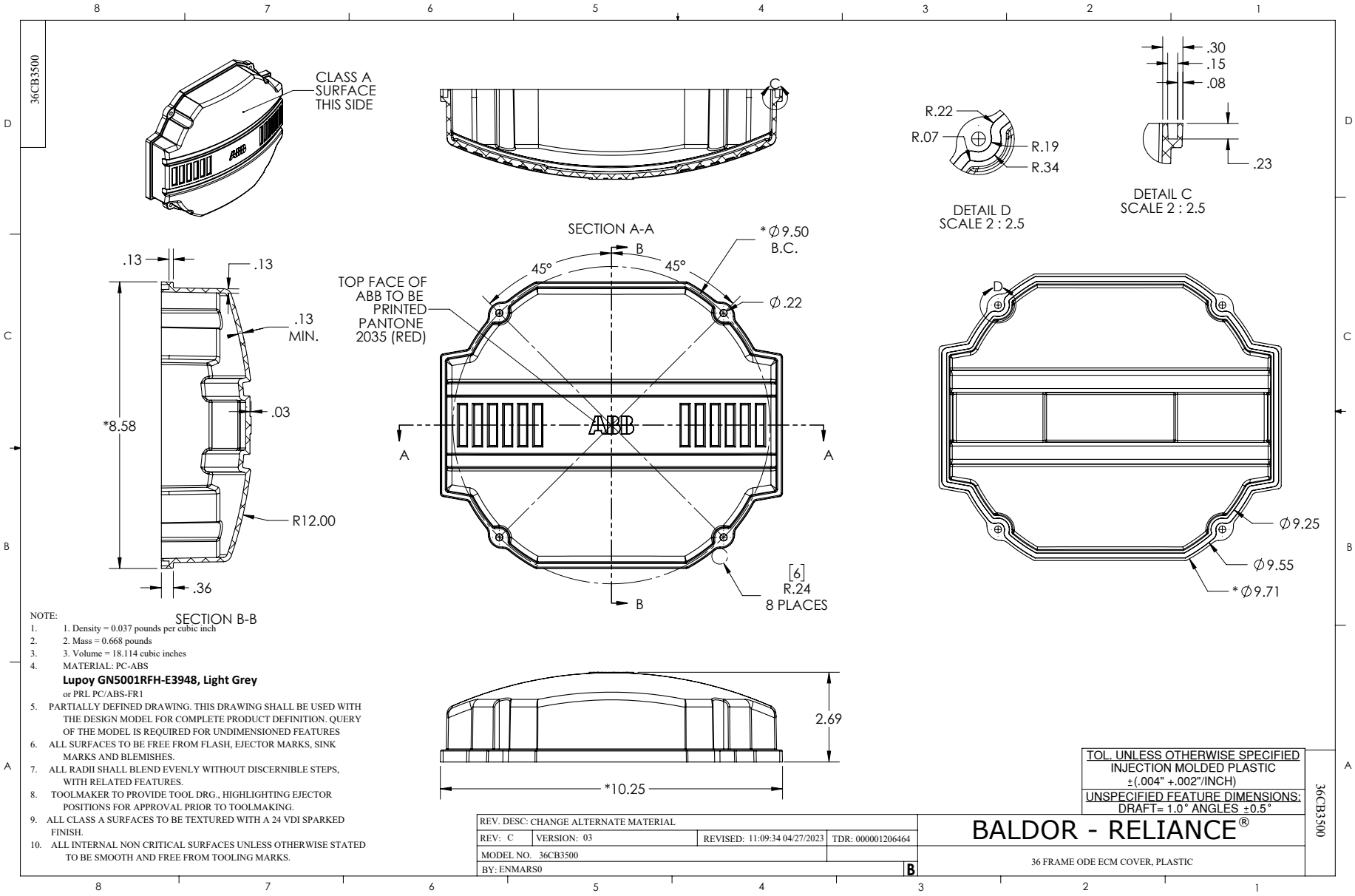

NOTE:
1. 1. Density = 0.037 pounds per cubic inch
2. 2. Mass = 0.668 pounds
3. 3. Volume = 18.114 cubic inches
4. MATERIAL: PC-ABS
   Lupoy GN5001RFH-E3948, Light Grey
   or PRL PC/ABS-FR1
5. PARTIALLY DEFINED DRAWING. THIS DRAWING SHALL BE USED WITH THE DESIGN MODEL FOR COMPLETE PRODUCT DEFINITION. QUERY OF THE MODEL IS REQUIRED FOR UNDIMENSIONED FEATURES
6. ALL SURFACES TO BE FREE FROM FLASH, EJECTOR MARKS, SINK MARKS AND BLEMISHES.
7. ALL RADII SHALL BLEND EVENLY WITHOUT DISCERNIBLE STEPS, WITH RELATED FEATURES.
8. TOOLMAKER TO PROVIDE TOOL DRG., HIGHLIGHTING EJECTOR POSITIONS FOR APPROVAL PRIOR TO TOOLMAKING.
9. ALL CLASS A SURFACES TO BE TEXTURED WITH A 24 VDI SPARKED FINISH.
10. ALL INTERNAL NON CRITICAL SURFACES UNLESS OTHERWISE STATED TO BE SMOOTH AND FREE FROM TOOLING MARKS.

REV. DESC: CHANGE ALTERNATE MATERIAL			
REV: C	VERSION: 03	REVISED: 11:09:34 04/27/2023	TDR: 000001206464
MODEL NO. 36CB3500			
BY: ENMARS0			B

TOL. UNLESS OTHERWISE SPECIFIED
INJECTION MOLDED PLASTIC
±(.004" +.002"/INCH)
UNSPECIFIED FEATURE DIMENSIONS:
DRAFT= 1.0° ANGLES ±0.5°

BALDOR - RELIANCE®

36 FRAME ODE ECM COVER, PLASTIC

36CB3500

CD0006

TYPICAL WYE–CONNECTED MOTOR

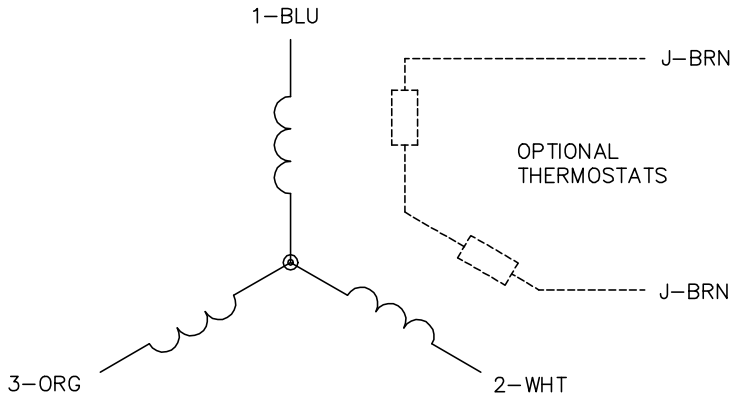

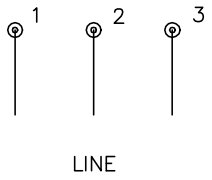

TYPICAL DELTA–CONNECTED MOTOR

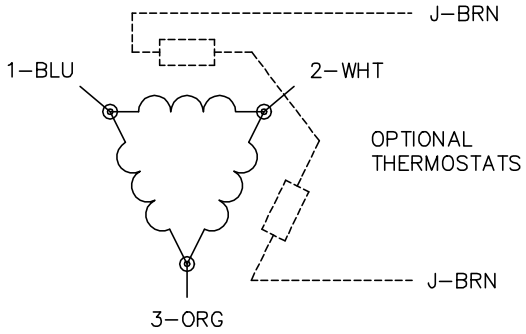

NOTES:

1. THREE LEAD MOTOR MAY BE EITHER WYE CONNECTED OR DELTA CONNECTED.
2. INTERCHANGE ANY TWO LINE LEADS TO REVERSE ROTATION.
3. OPTIONAL THERMOSTATS ARE PROVIDED WHEN SPECIFIED.
4. ACTUAL NUMBER OF INTERNAL PARALLEL CIRCUITS MAY VARY.
5. LEAD COLORS ARE OPTIONAL. LEADS MUST BE NUMBERED AS SHOWN.

CD0006

REV. DESC: ADD CLASS CONN00000007		
REV. LTR: E	VERSION: 01	TDR: 000001099922
FILE: \AAA\00005\141	REVISED: 10:24:49 02/19/2019	BY: ENBRIR0
MTL: –		

BALDOR - RELIANCE®

3PH, SV, 3 LEADS, WYE OR DELTA CONNECTED

SH 1 of 1