ABB BALDOR RELIANCE

Customer information packet

ECS100T2H3EF4

3HP, 1800RPM, 3PH, 60HZ, 182T, 3624B, TEFC, F1
Class - None
Division - Not Applicable

Copyright © All product information within this document is subject to ABB Motors and Mechanical Inc. copyright © protection, unless otherwise noted.
11/23/2026 3:49:47 AM

Specifications

Enclosure	TEFC
Frame	182T
Frame Material	Steel
Frequency	60.00 Hz
Haz Area Class and Group	None
Haz Area Division	Not Applicable
Motor Letter Type	Three Phase
Output @ Frequency	3.000 HP @ 60 HZ
Phase	3
Synchronous Speed @ Frequency	1800 RPM @ 60 HZ
Voltage @ Frequency	230.0 V @ 60 HZ
Agency Approvals	BLUETOOTH
	WEEE
	CULUS
Ambient Temperature	40 °C
Auxiliary Box	NO AUXILLARY BOX
Auxiliary Box Lead Termination	None
Base Indicator	Rigid
Bearing Grease Type	Polyrex EM (-20F +300F)
Blower	None
Constant Torque Speed Range	6
Current @ Voltage	7.300 A @ 230.0 V
Drip Cover	No Drip Cover
Duty Rating	CONT
Efficiency @ 100% Load	92.8 %
Electrically Isolated Bearing	Not Electrically Isolated
Feedback Device	NO FEEDBACK
Heater Indicator	No Heater
High Voltage Full Load Amps	7.3 a
Insulation Class	F
Inverter Code	Inverter Duty
Lifting Lugs	Standard Lifting Lugs

Part Detail

Revision	-
Type	AC
Mech. spec.	
Base	
Status	PRD/A
Elec. spec.	36WGA0023
Layout	36LYT258
Eff. date	05-05-2025
CD Diagram	CD0006B03
Poles	04
Leads	3#14 19" LONG LEADS
Proprietary	False
Created date	04-30-2025

Locked Bearing Indicator	No Locked Bearing
Motor Lead Termination	Flying Leads
Motor Standards	NEMA
Motor Type	3624B
Mounting Arrangement	F1
Number of Poles	4
Overall Length	16.71 IN
Power Factor	97
Product Family	General Purpose
Pulley Face Code	Standard
Rodent Screen	None
Service Factor	1.00
Shaft Diameter	1.125 IN
Shaft Ground Indicator	Shaft Grounding
Shaft Rotation	Reversible
Speed	1800 rpm
Speed Code	Single Speed
Starting Method	Direct on line
Thermal Device - Bearing	None
Thermal Device - Winding	None
Vibration Sensor Indicator	No Vibration Sensor
Winding Thermal 1	None
Winding Thermal 2	None

Nameplate

NP3978A01								
PART NO.	ECI2A10P5							
U1	240	**PH**	3	**HZ**	60			
I1	9.3	**W/EXT. CHOKE**			7.8			
SERIAL #								

NP3968A01A01								
CAT.NO.	ECS100T2H3EF4							
SPEC.	36-0006113							
FRAME	182T			**ENCL.**	TEFC	**IP**	54	
HP	3		40	**C AMB**		CONT		
NOM. EFF.	92.8	**PF**	97		**SF**	1		
VOLTS	230			**FLA**	7.3			
RPM	1800			**RPM-MAX**		4000		
HZ	60		**PH.**	3	**CLASS**	F		
BEMF (V)	106				**RS (OHMS)**	0.97		
LD (MH)	14.4				**LQ (MH)**	54.4		
VPWM	**CHP**	60	**TO**	133				
CT	6	**TO**	60	**VT**	1	**TO**	133	
MATCHED INV	ECI2A10P5							
DE	6206			**ODE**	6205			
SERIAL #								

Parts List

Part number	Description	Quantity
SA437284	SA 36-0006113	1.000 ea
RA429639	RA 36-0006113	1.000 ea
NP3978A01	MYLAR BALDOR-RELIANCE SYNC IPM DRIVE 4.3	1.000 ea
NP3968A01A01	NP LABEL WEE, SH GND, C-UL-US, QR, ECS	1.000 ea
MN451	EC Titanium Quick Start 06/22	1.000 ea
36FH3006	36 FRAME TOP ECM FAN HOUSING	1.000 ea
51XW1032A06	10-32 X .38, TAPTITE II, HEX WSHR SLTD S	3.000 ea
36FN3000A01SP	EXFN, PLASTIC, 7.00 OD, .912 ID	1.000 ea
51XB1214A16	12-14X1.00 HXWSSLD SERTYB	1.000 ea
MJ1000A02	GREASE, POLYREX EM EXXON	0.050 lb
HA3101A25	THRUBOLT 1/4-20 X 11.000 OHIO ROD	4.000 ea
XY2520A12	1/4-20 HEX NUT, DIRECTIONAL SERRATIONS	4.000 ea
36EP3104B46	CUSTOM ODE, 205 BRG, #26 DRAIN,	1.000 ea
HW5100A05	WVY WSHR F/205 & 304 BRGS	1.000 ea
HA4067A01	PUSH IN DRAIN FITTING (BLACK)	1.000 ea
HS0054A00	36 FRAME TOP ECM HEATSINK MACHINING	1.000 ea
36CB3501A00	36&37 FRAME TOP ECM PLASTIC COVER WITH F	1.000 ea
GS0024	ECM GASKET,36 TOP MOUNT,HEATSINK TO FRAM	1.000 ea
51XB1016A07	10-16 X 7/16 HXWSSLD SERTYB	4.000 ea
15XN1032A10	SCREW PAN HD 10-32 X .625 (PHILLIPS)	4.000 ea
36EP3100A42	PU EP, LOCKED 206 BRG, NO GRS	1.000 ea
HW4600B36SP	V-RING SLINGER 1.188 X 1.380 X .24 VITON	1.000 ea
10XN2520A20	1/4-20X 1 1/4 HEX HD X	2.000 ea
HW1001A25	LOCKWASHER 1/4, ZINC PLT .493 OD, .255 I	2.000 ea
HA4067A01	PUSH IN DRAIN FITTING (BLACK)	1.000 ea
WD4100A66	HEYCO #3835 KNOCKOUT PLUG(KOS-LT 3/4) BL	2.000 ea
WD4100A30	HEYCO #3833 RUBBER PLUG KOS-LT - 1/2	2.000 ea
ECI2A10P5SP	200-240V, 3.0HP, 10.5A, W/BK CHOP, RTC,	1.000 ea
MG1050G01	CELEROL MEDIUM CHARCOAL METALLIC GRAY	0.022 ga
MJ5002A02	NON-CORROSIVE SILICONE, DOW 748, 10.3 OZ	0.001 ea
07PA1005	PKG GRP, PRINT PK1156A07	1.000 ea

HW2501E19	STD SQUARE KEY .25 SQUARE X 2.125 LONG	1.000 ea
HA7000A02	KEY RETAINER RING, 1 1/8 DIA, 1 3/8 DIA	1.000 ea
FE-0000001	ZRTG FE ASSEMBLY	1.000 ea
PE-0000001	ZRTG PE ASSEMBLY	1.000 ea

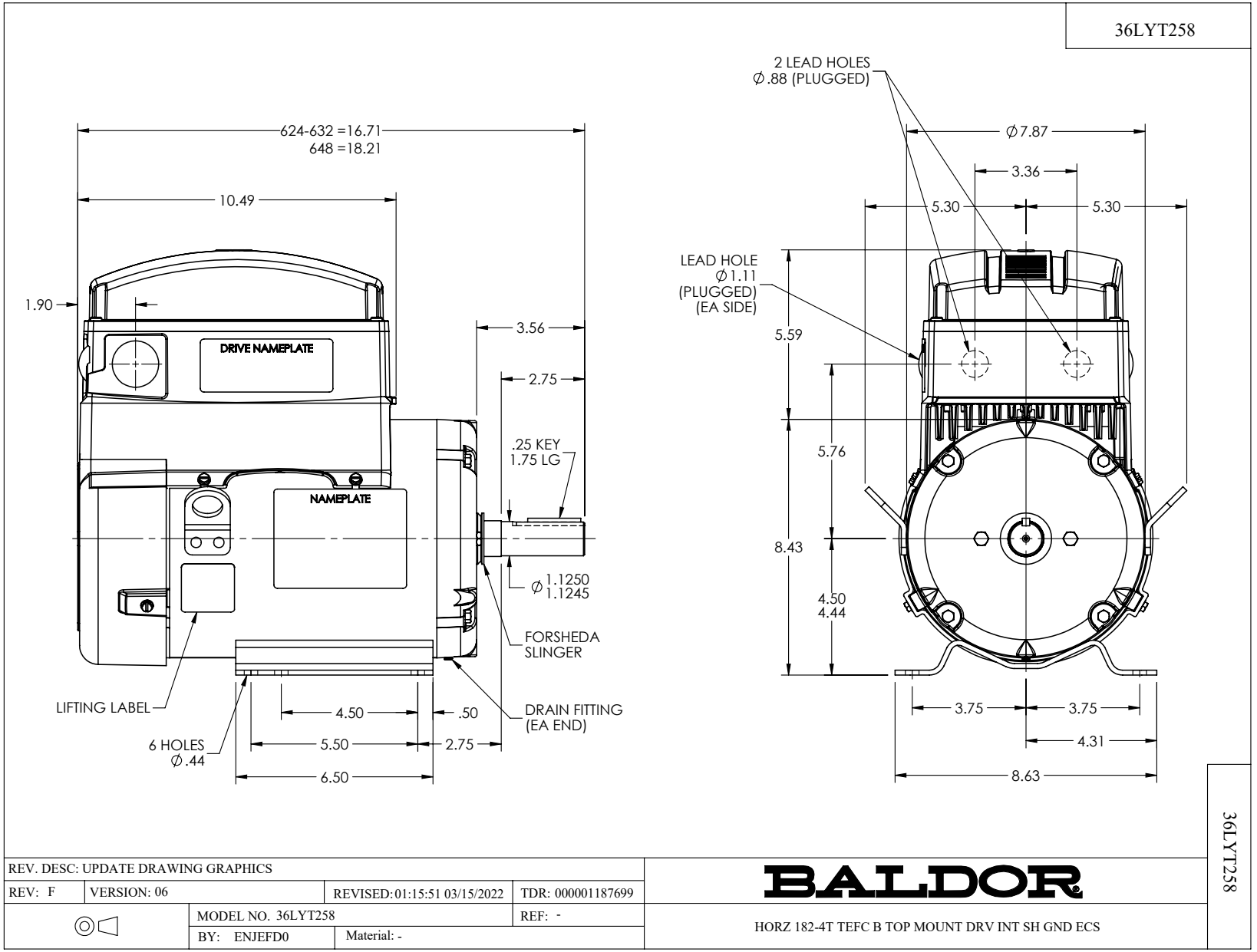
36LYT258
624-632 =16.71
648 =18.21
10.49
1.90
DRIVE NAMEPLATE
NAMEPLATE
3.56
2.75
.25 KEY
1.75 LG
Ø1.1250
1.1245
FORSHEDA
SLINGER
LIFTING LABEL
DRAIN FITTING
(EA END)
4.50
.50
5.50
2.75
6.50
6 HOLES
Ø.44
2 LEAD HOLES
Ø.88 (PLUGGED)
Ø7.87
3.36
5.30
5.30
LEAD HOLE
Ø1.11
(PLUGGED)
(EA SIDE)
5.59
5.76
8.43
4.50
4.44
3.75
3.75
4.31
8.63
36LYT258
REV. DESC: UPDATE DRAWING GRAPHICS
REV: F
VERSION: 06
REVISED: 01:15:51 03/15/2022
TDR: 000001187699
MODEL NO. 36LYT258
REF: -
BY: ENJEFD0
Material: -
BALDOR
HORZ 182-4T TEFC B TOP MOUNT DRV INT SH GND ECS

36CB3501A00

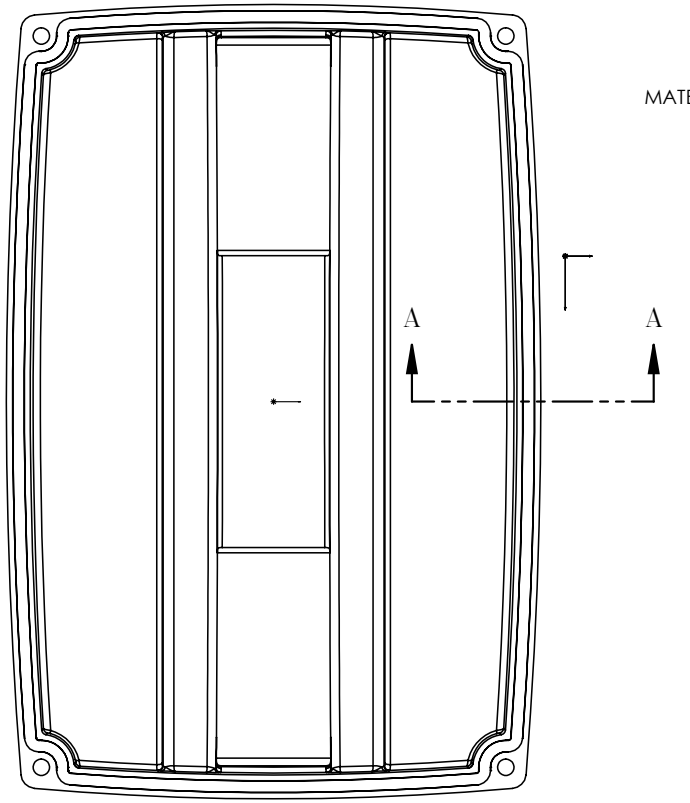

MATERIAL: RAMPF, RAKU-PUR 32-3280-51L

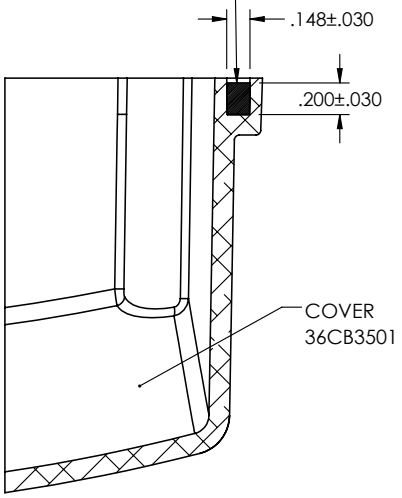

SECTION A–A

36CB3501A00

REV. DESC: UPDATE MATERIAL			
REV: A	VERSION: 01	REVISED: 10:46:37 03/29/2019	TDR: 000001101646
	MODEL NO. 36CB3501A00		REF: -
	BY: ENMARS0	Material: -	

BALDOR - RELIANCE®

36 & 37 FRAME TOP ECM COVER WITH FOAM SEAL

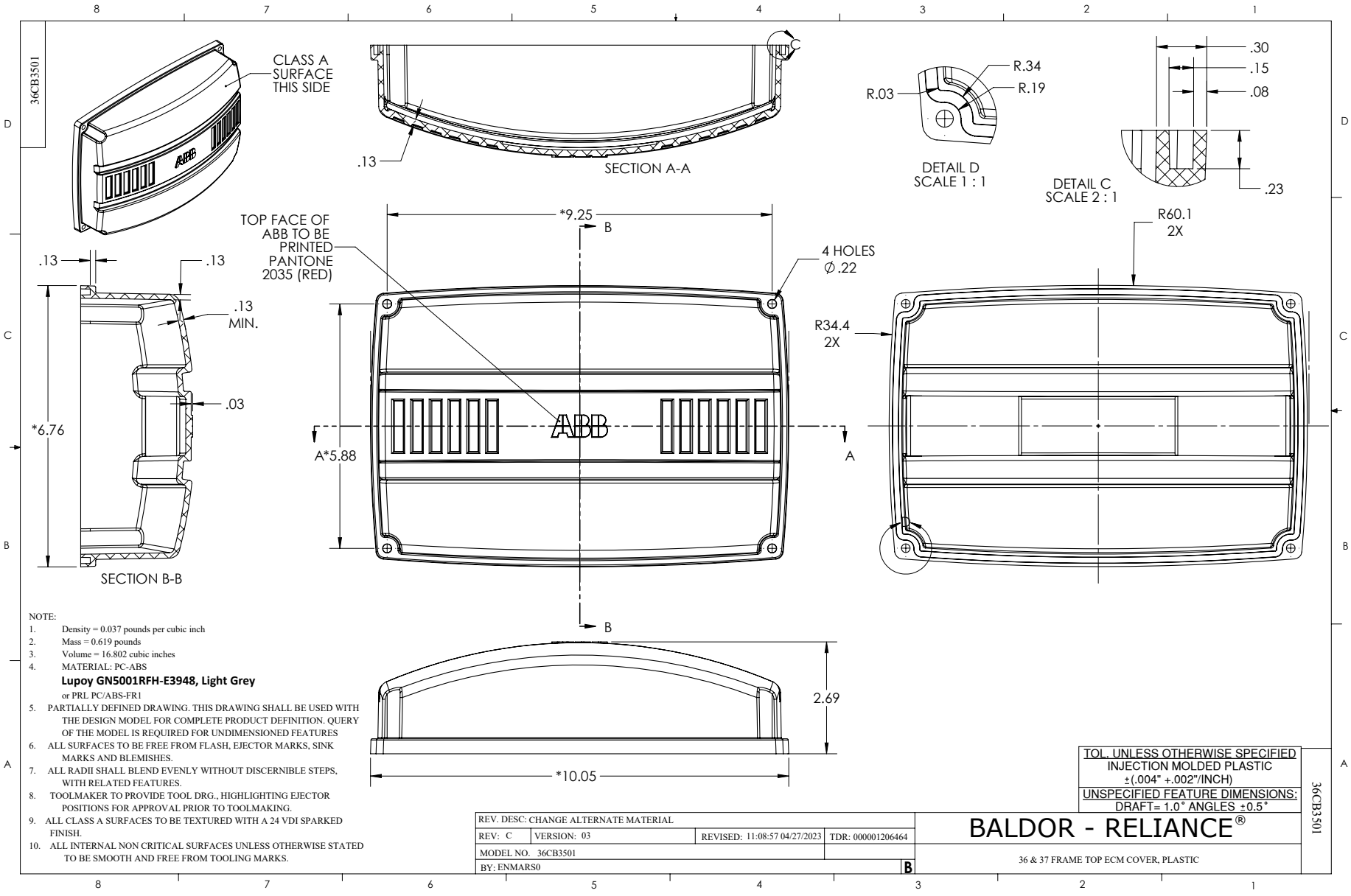

NOTE:
1. Density = 0.037 pounds per cubic inch
2. Mass = 0.619 pounds
3. Volume = 16.802 cubic inches
4. MATERIAL: PC-ABS
   Lupoy GN5001RFH-E3948, Light Grey
   or PRL PC/ABS-FR1
5. PARTIALLY DEFINED DRAWING. THIS DRAWING SHALL BE USED WITH THE DESIGN MODEL FOR COMPLETE PRODUCT DEFINITION. QUERY OF THE MODEL IS REQUIRED FOR UNDIMENSIONED FEATURES
6. ALL SURFACES TO BE FREE FROM FLASH, EJECTOR MARKS, SINK MARKS AND BLEMISHES.
7. ALL RADII SHALL BLEND EVENLY WITHOUT DISCERNIBLE STEPS, WITH RELATED FEATURES.
8. TOOLMAKER TO PROVIDE TOOL DRG., HIGHLIGHTING EJECTOR POSITIONS FOR APPROVAL PRIOR TO TOOLMAKING.
9. ALL CLASS A SURFACES TO BE TEXTURED WITH A 24 VDI SPARKED FINISH.
10. ALL INTERNAL NON CRITICAL SURFACES UNLESS OTHERWISE STATED TO BE SMOOTH AND FREE FROM TOOLING MARKS.

REV. DESC: CHANGE ALTERNATE MATERIAL			
REV: C	VERSION: 03	REVISED: 11:08:57 04/27/2023	TDR: 000001206464
MODEL NO. 36CB3501			
BY: ENMARS0			B

TOL. UNLESS OTHERWISE SPECIFIED
INJECTION MOLDED PLASTIC
±(.004" +.002"/INCH)
UNSPECIFIED FEATURE DIMENSIONS:
DRAFT= 1.0° ANGLES ±0.5°

BALDOR - RELIANCE®

36 & 37 FRAME TOP ECM COVER, PLASTIC

36CB3501

CD0006B03

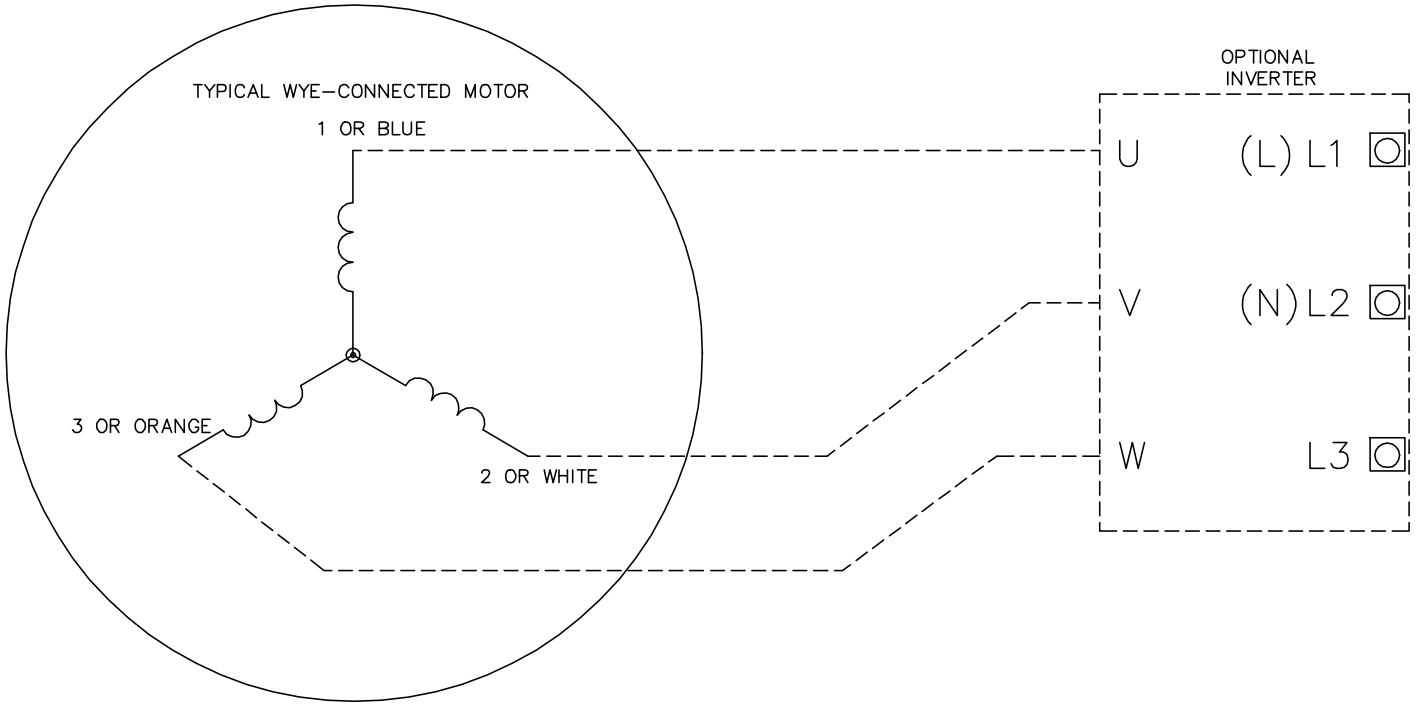

NOTES:

1. INTERCHANGE ANY TWO LINE LEADS TO REVERSE ROTATION.
2. ACTUAL NUMBER OF INTERNAL PARALLEL CIRCUITS MAY VARY.

CD0006B03

REV. DESC: CHANGE LEAD COLORS TO BLUE WHITE ORANGE		
REV. LTR: A	VERSION: 01	TDR: 000001158598
FILE: \AAA\00252\917	REVISED: 11:01:03 01/19/2021	BY: ENMARSO
MTL: –		

BALDOR - RELIANCE®

3PH, SV, 3 LEADS, WYE CONNECTED, ECS

SH 1 of 1