ABB BALDOR RELIANCE

Customer information packet

ECS100T4H10FF4

10HP, 1800RPM, 3PH, 60HZ, 215T, TEFC, TOP
Class - None
Division - Not Applicable

Copyright © All product information within this document is subject to ABB Motors and Mechanical Inc. copyright © protection, unless otherwise noted.
11/23/2026 3:34:05 AM

Specifications

Enclosure	TEFC
Frame	215T
Frame Material	Steel
Frequency	60.00 Hz
Haz Area Class and Group	None
Haz Area Division	Not Applicable
Motor Letter Type	Three Phase
Phase	3
Agency Approvals	UL
	WEEE
Auxiliary Box	NO AUXILLARY BOX
Auxiliary Box Lead Termination	None
Base Indicator	Rigid
Bearing Grease Type	Polyrex EM (-20F +300F)
Blower	None
Constant Torque Speed Range	6
Design Code	0
Drip Cover	No Drip Cover
Electrically Isolated Bearing	Not Electrically Isolated
Feedback Device	NO FEEDBACK
Heater Indicator	No Heater
Inverter Code	Inverter Duty
Lifting Lugs	Standard Lifting Lugs
Locked Bearing Indicator	Locked Bearing
Motor Lead Quantity/Wire Size	3 @ 12 AWG
Motor Lead Termination	Flying Leads
Motor Standards	NEMA
Motor Type	3740B
Mounting Arrangement	F1
Number of Poles	4
Overall Length	19.23 IN
Product Family	General Purpose

Part Detail

Revision	M
Type	AC
Mech. spec.	37Q460
Base	
Status	PRD/A
Elec. spec.	37WGL009
Layout	37LYQ460
Eff. date	02-11-2026
CD Diagram	CD0006
Poles	04
Leads	3#12
Proprietary	False
Created date	02-05-2020

Pulley Face Code	Standard
Rodent Screen	None
RoHS Status	ROHS COMPLIANT
Shaft Diameter	1.375 IN
Shaft Ground Indicator	Shaft Grounding
Shaft Rotation	Reversible
Speed Code	Single Speed
Starting Method	INVERTER SPECIAL
Thermal Device - Bearing	None
Thermal Device - Winding	None
Vibration Sensor Indicator	No Vibration Sensor
Winding Thermal 1	None
Winding Thermal 2	None

BALDOR·RELIANCE

EC-Titanium™

CAT. NO.	ECS100T4H10FF4						
SPEC.	37Q460L009G1				YR	***	
FRAME	215T		ENCL.	TEFC	IP	54	
HP	10	RATING	40C AMB-CONT				
NOM. EFF.	94.8%	PF	93.7%	SF	1.00		
VOLTS	460		FLA	11.0			
RPM	1800		RPM MAX	3000			
HZ	60		PH.	3	CLASS	F	
BEMF (V)	231		Rs (Ω)	A			
Ld (mH)	A		Lq (mH)	A			
INV TYP	VPWM	CHP	60 TO 100 HZ				
	CT	6 TO 60 HZ	VT	1 TO 60 HZ			
MATCHED INV	EC14A12P0						
BEARING	DE	6307	ODE	6206			
SERIAL#	***						

ELECTRONICALLY PROTECTED MOTOR
FOR INDUSTRIAL USE

FERRITE ASSISTED
SYNCHRONOUS RELUCTANCE MOTOR
FOR INVERTER USE ONLY

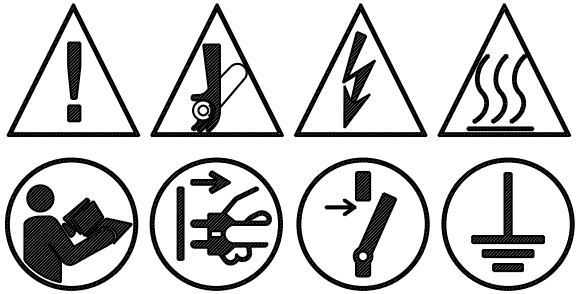

PERMANENT MAGNET MOTOR. WHEN SHAFT IS ROTATED, VOLTAGE WILL BE GENERATED AT THE MOTOR TERMINALS.
MOTEUR Á AIMANT PERMANENT. LORSQUE L'ARBRE TOURNE, UNE TENSION SERA GÉNÉRÉE AUX BORNES DU MOTEUR.

BALDOR-RELIANCE
SHAFT GROUNDING BRUSH INSTALLED

c UL us LISTED
E46145

ABB MOTORS AND MECHANICAL INC.
5711 R.S. BOREHAM JR. ST., FORT SMITH, AR. MFG IN U.S.A.

BALDOR • RELIANCE

EC-Titanium™

PART NO.	EC14A12P0				
U1	480	PH	3	HZ	60
I1 MAX	10.1	W/EXT. CHOKE			9.4
SERIAL #	***				



POWER DOWN FOR
5 MINUTES BEFORE
REMOVING COVER

METTRE HORS TENSION
PENDANT 5 MINUTES
AVANT DE RETIRER LE
COUVERCLE

ABB MOTORS AND MECHANICAL
INC. FORT SMITH, AR.
MFG. IN U.S.A.

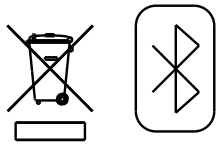

Parts List

Part number	Description	Quantity
SA379342	SA 37Q460L009G1	1.000 ea
RA369333	RA 37Q460L009G1	1.000 ea
ECI4A12P0SP	380-480V, 7.5HP, 12.0A, W/BK CHOP, RTC,	1.000 ea
37EP3101A04	FR ENDPLATE, MACH	1.000 ea
HA4067A01	PUSH IN DRAIN FITTING (BLACK)	1.000 ea
HW5100A06	W2420-025 WVY WSHR (WB)	1.000 ea
37EP3100B32	PU EP 307 LOCK BRG, DRAIN, W/O GRSR	1.000 ea
HA4067A01	PUSH IN DRAIN FITTING (BLACK)	1.000 ea
10XN2520A28	1/4-20X 1 3/4 HEX HD	4.000 ea
HW1001A25	LOCKWASHER 1/4, ZINC PLT .493 OD, .255 I	4.000 ea
XY3118A12	5/16-18 HEX NUT DIRECTIONAL SERRATION	4.000 ea
51XB1214A20	12-14X1.25 HXWSSLD SERTYB	1.000 ea
HA3104A17	5/16-18X13.250 T-BLT/OHIO	4.000 ea
37FH3006	37 FRAME TOP ECM FAN HOUSING	1.000 ea
51XW1032A06	10-32 X .38, TAPTITE II, HEX WSHR SLTD S	2.000 ea
HS0055A00	37 FRAME TOP ECM HEATSINK MACHINING	1.000 ea
GS0024	ECM GASKET,36 TOP MOUNT,HEATSINK TO FRAM	1.000 ea
WD4100A30	HEYCO #3833 RUBBER PLUG KOS-LT - 1/2	2.000 ea
WD4100A66	HEYCO #3835 KNOCKOUT PLUG(KOS-LT 3/4) BL	2.000 ea
51XB1016A07	10-16 X 7/16 HXWSSLD SERTYB	4.000 ea
36CB3501A00	36&37 FRAME TOP ECM PLASTIC COVER WITH F	1.000 ea
15XN1032A10	SCREW PAN HD 10-32 X .625 (PHILLIPS)	4.000 ea
MJ5002A02	NON-CORROSIVE SILICONE, DOW 748, 10.3 OZ	0.001 ea
HW4600C51	31X39X7.5MM FACE SEAL FOR 1.375 DIA. SH	1.000 ea
HW2501F21	KEY, 5/16 SQ X 2.375	1.000 ea
HA7000A02	KEY RETAINER RING, 1 1/8 DIA, 1 3/8 DIA	1.000 ea
LB1602	LABEL, LIFTING DEVICE REQUIRING SPREADER	1.000 ea
MJ1000A02	GREASE, POLYREX EM EXXON	0.050 lb
37FN3002A01SP	EXFN, PLASTIC, 9.00 OD, 1.155 ID	1.000 ea
51XB1214A20	12-14X1.25 HXWSSLD SERTYB	1.000 ea
15XN1032A14	10-32X7/8 PH PAN HD MACHINE ZINC SC	3.000 ea

MG1050G01	CELEROL MEDIUM CHARCOAL METALLIC GRAY	0.028 ga
NP3968	MYLAR BLANK 4.375W X 3.375L	1.000 ea
NP3978	MYLAR BLANK 4.375W X 1.75L	1.000 ea
37PA1067	PALLET PACK GROUP, PK1156A07, PK1900A06	1.000 ea
MN451	EC Titanium Quick Start 06/22	1.000 ea
FE-0000001	ZRTG FE ASSEMBLY	1.000 ea

37LYQ460

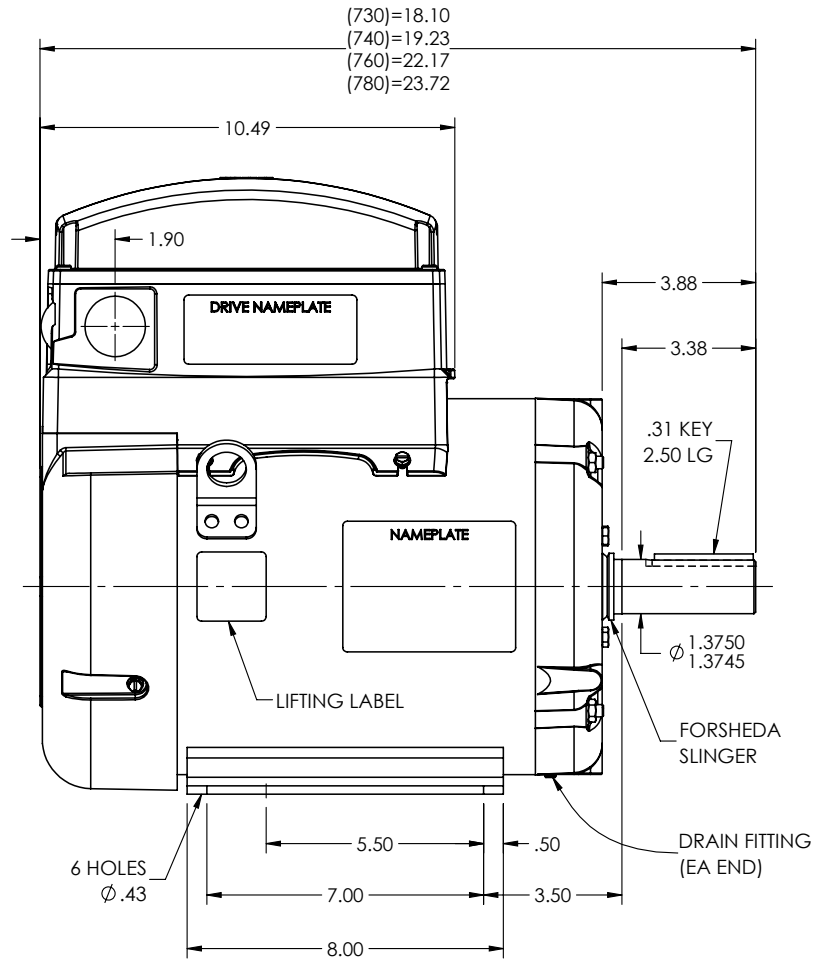

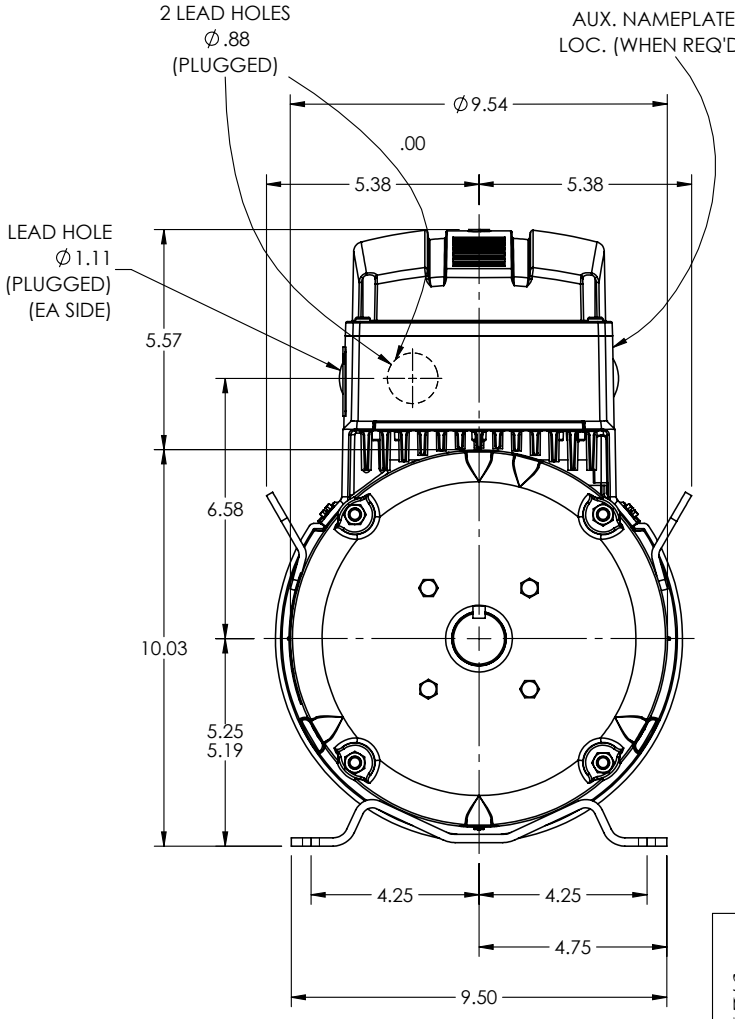

REV. DESC: HW313104A59 WAS HW3100A82			
REV: H	VERSION: 08	REVISED: 09:32:21 06/05/2025	TDR: 000001256072
37LYQ460	MODEL NO. 37LYQ460		REF: -
	BY: USEROLI		

BALDOR - RELIANCE®

HOR 213-5T TEFC B TOP MOUNT DRV INT SH GND ECS

37LYQ460

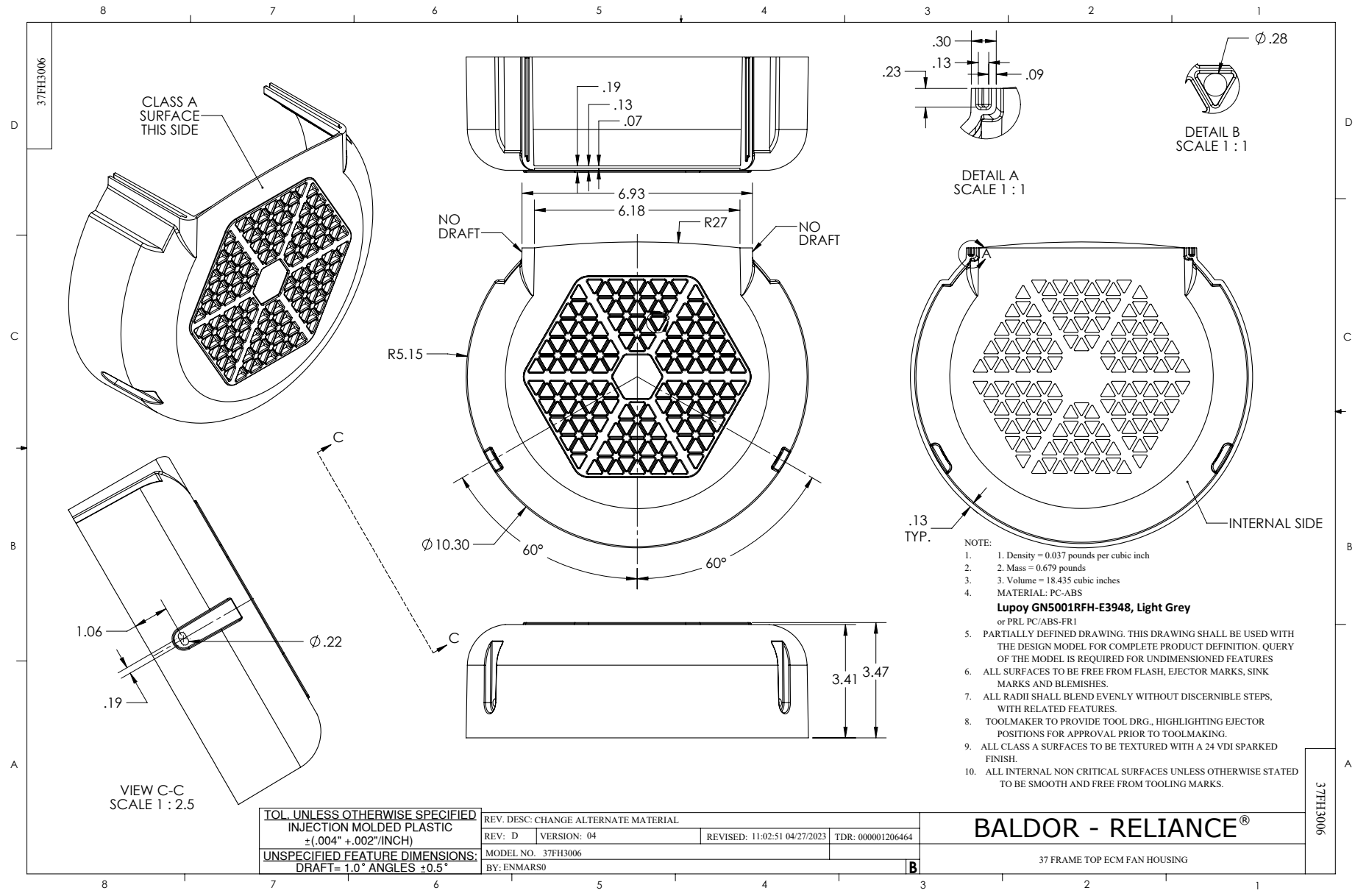

NOTE:
1. 1. Density = 0.037 pounds per cubic inch
2. 2. Mass = 0.679 pounds
3. 3. Volume = 18.435 cubic inches
4. MATERIAL: PC-ABS
   Lupoy GN5001RFH-E3948, Light Grey
   or PRL PC/ABS-FR1
5. PARTIALLY DEFINED DRAWING. THIS DRAWING SHALL BE USED WITH THE DESIGN MODEL FOR COMPLETE PRODUCT DEFINITION. QUERY OF THE MODEL IS REQUIRED FOR UNDIMENSIONED FEATURES
6. ALL SURFACES TO BE FREE FROM FLASH, EJECTOR MARKS, SINK MARKS AND BLEMISHES.
7. ALL RADII SHALL BLEND EVENLY WITHOUT DISCERNIBLE STEPS, WITH RELATED FEATURES.
8. TOOLMAKER TO PROVIDE TOOL DRG., HIGHLIGHTING EJECTOR POSITIONS FOR APPROVAL PRIOR TO TOOLMAKING.
9. ALL CLASS A SURFACES TO BE TEXTURED WITH A 24 VDI SPARKED FINISH.
10. ALL INTERNAL NON CRITICAL SURFACES UNLESS OTHERWISE STATED TO BE SMOOTH AND FREE FROM TOOLING MARKS.

TOL. UNLESS OTHERWISE SPECIFIED INJECTION MOLDED PLASTIC ±(.004" +.002"/INCH)	REV. DESC: CHANGE ALTERNATE MATERIAL		BALDOR - RELIANCE®
	REV: D VERSION: 04	REVISED: 11:02:51 04/27/2023 TDR: 000001206464	
UNSPECIFIED FEATURE DIMENSIONS: DRAFT= 1.0° ANGLES ±0.5°	MODEL NO. 37FH3006		37 FRAME TOP ECM FAN HOUSING
	BY: ENMARS0	B	37FH3006

36CB3501A00

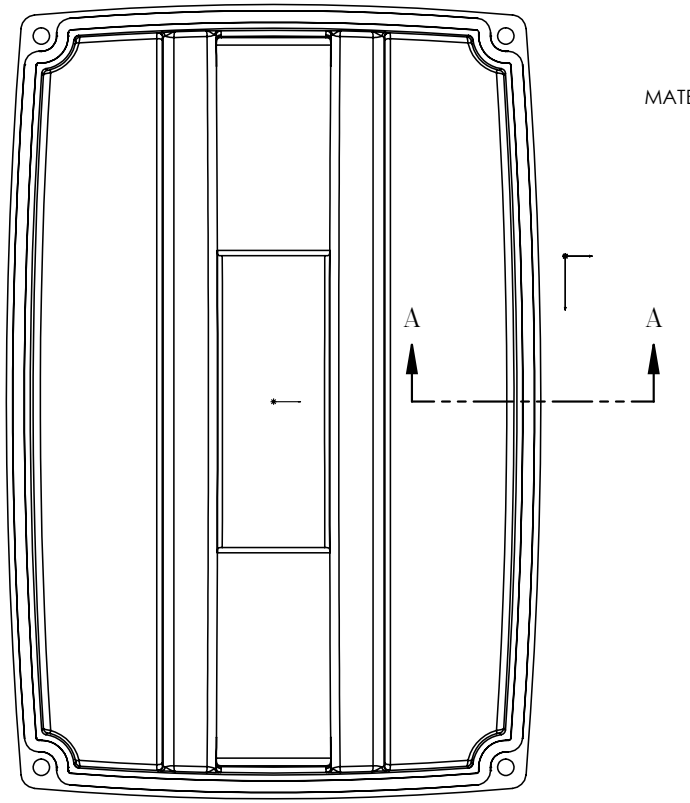

MATERIAL: RAMPF, RAKU-PUR 32-3280-51L

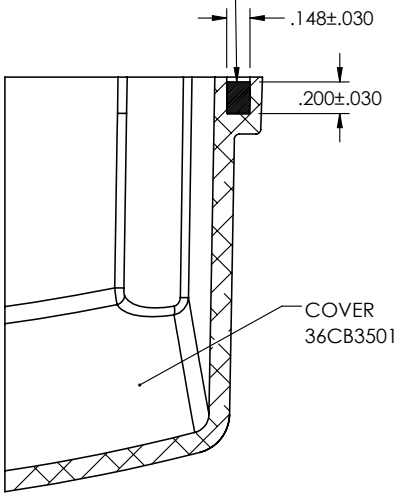

SECTION A–A

36CB3501A00

REV. DESC: UPDATE MATERIAL			
REV: A	VERSION: 01	REVISED: 10:46:37 03/29/2019	TDR: 000001101646
	MODEL NO. 36CB3501A00		REF: -
	BY: ENMARS0	Material: -	

BALDOR - RELIANCE®

36 & 37 FRAME TOP ECM COVER WITH FOAM SEAL

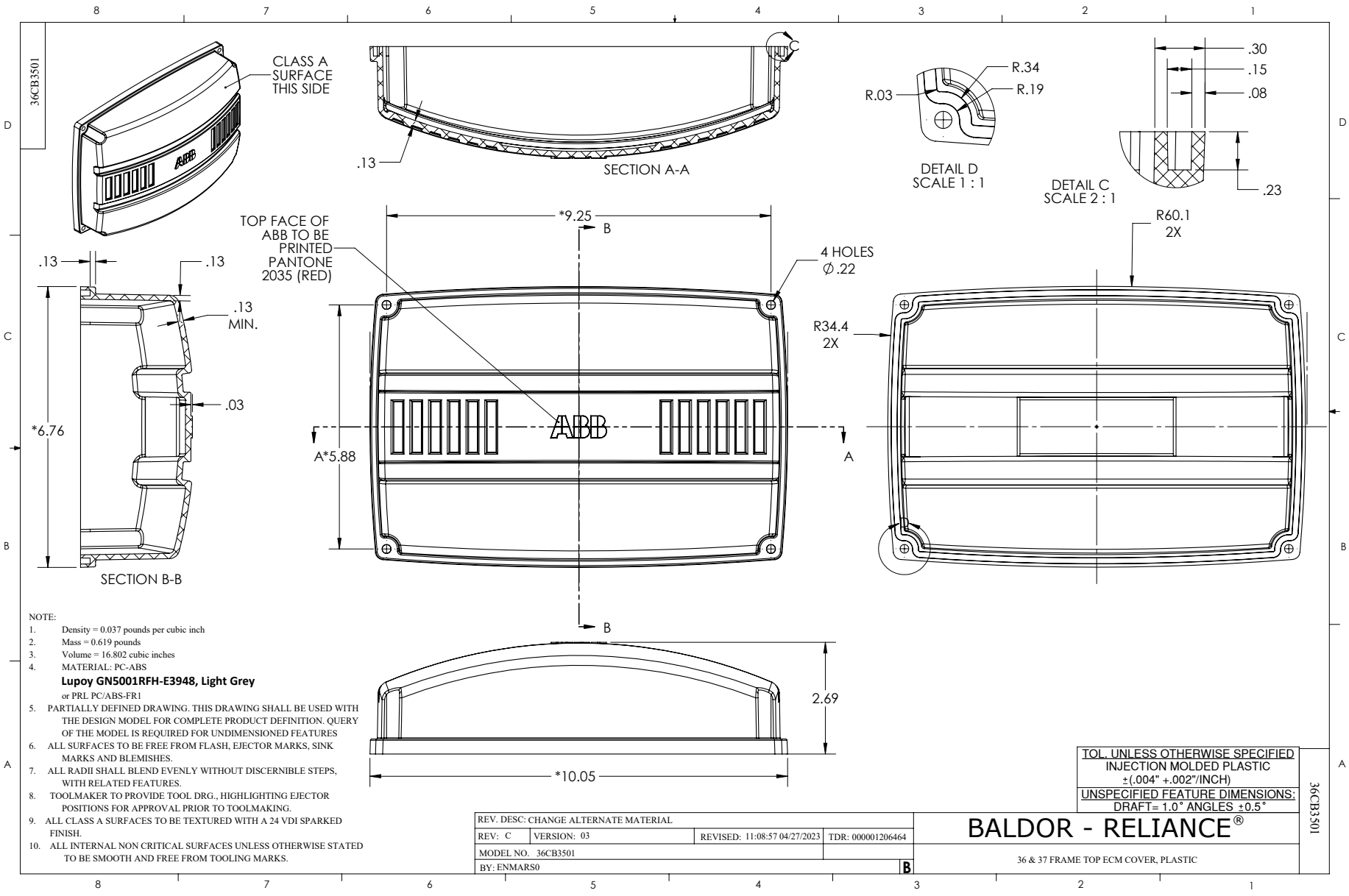

NOTE:
1. Density = 0.037 pounds per cubic inch
2. Mass = 0.619 pounds
3. Volume = 16.802 cubic inches
4. MATERIAL: PC-ABS
   Lupoy GN5001RFH-E3948, Light Grey
   or PRL PC/ABS-FR1
5. PARTIALLY DEFINED DRAWING. THIS DRAWING SHALL BE USED WITH THE DESIGN MODEL FOR COMPLETE PRODUCT DEFINITION. QUERY OF THE MODEL IS REQUIRED FOR UNDIMENSIONED FEATURES
6. ALL SURFACES TO BE FREE FROM FLASH, EJECTOR MARKS, SINK MARKS AND BLEMISHES.
7. ALL RADII SHALL BLEND EVENLY WITHOUT DISCERNIBLE STEPS, WITH RELATED FEATURES.
8. TOOLMAKER TO PROVIDE TOOL DRG., HIGHLIGHTING EJECTOR POSITIONS FOR APPROVAL PRIOR TO TOOLMAKING.
9. ALL CLASS A SURFACES TO BE TEXTURED WITH A 24 VDI SPARKED FINISH.
10. ALL INTERNAL NON CRITICAL SURFACES UNLESS OTHERWISE STATED TO BE SMOOTH AND FREE FROM TOOLING MARKS.

REV. DESC: CHANGE ALTERNATE MATERIAL			
REV: C	VERSION: 03	REVISED: 11:08:57 04/27/2023	TDR: 000001206464
MODEL NO. 36CB3501			
BY: ENMARS0			B

TOL. UNLESS OTHERWISE SPECIFIED
INJECTION MOLDED PLASTIC
±(.004" +.002"/INCH)
UNSPECIFIED FEATURE DIMENSIONS:
DRAFT= 1.0° ANGLES ±0.5°

BALDOR - RELIANCE®

36 & 37 FRAME TOP ECM COVER, PLASTIC

36CB3501

CD0006

TYPICAL WYE–CONNECTED MOTOR

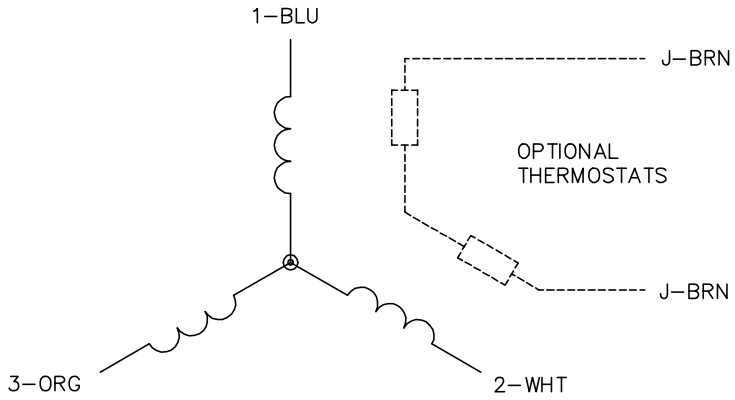

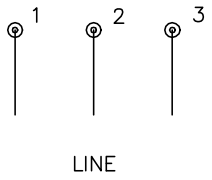

TYPICAL DELTA–CONNECTED MOTOR

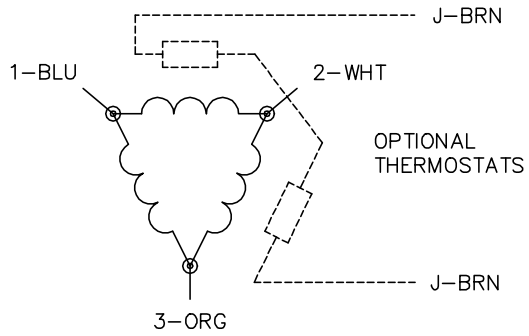

NOTES:

1. THREE LEAD MOTOR MAY BE EITHER WYE CONNECTED OR DELTA CONNECTED.
2. INTERCHANGE ANY TWO LINE LEADS TO REVERSE ROTATION.
3. OPTIONAL THERMOSTATS ARE PROVIDED WHEN SPECIFIED.
4. ACTUAL NUMBER OF INTERNAL PARALLEL CIRCUITS MAY VARY.
5. LEAD COLORS ARE OPTIONAL. LEADS MUST BE NUMBERED AS SHOWN.

CD0006

REV. DESC: ADD CLASS CONN00000007		
REV. LTR: E	VERSION: 01	TDR: 000001099922
FILE: \AAA\00005\141	REVISED: 10:24:49 02/19/2019	BY: ENBRIR0
MTL: –		

BALDOR - RELIANCE®

3PH, SV, 3 LEADS, WYE OR DELTA CONNECTED

SH 1 of 1