ABB BALDOR RELIANCE

Customer information packet

IDVSWDM3554T

1.5HP, 1770RPM, 3PH, 60HZ, 145TC, 3524M, TEFC
Class - None
Division - Not Applicable

Copyright © All product information within this document is subject to ABB Motors and Mechanical Inc. copyright © protection, unless otherwise noted.
11/23/2026 2:23:20 AM

Specifications

Enclosure	TEFC
Frame	145TC
Frame Material	Stainless Steel
Frequency	60.00 Hz
Haz Area Class and Group	None
Haz Area Division	Not Applicable
Motor Letter Type	Three Phase
Output @ Frequency	1.500 HP @ 60 HZ
Phase	3
Synchronous Speed @ Frequency	1800 RPM @ 60 HZ
Voltage @ Frequency	230.0 V @ 60 HZ
	460.0 V @ 60 HZ
Agency Approvals	CSA
	UR
Ambient Temperature	40 °C
Auxiliary Box	NO AUXILLARY BOX
Auxiliary Box Lead Termination	None
Base Indicator	No Mounting
Bearing Grease Type	Polyrex EM (-20F +300F)
Blower	None
Current @ Voltage	2.300 A @ 460.0 V
	4.600 A @ 230.0 V
	4.640 A @ 208.0 V
Design Code	B
Drip Cover	No Drip Cover
Duty Rating	CONT
Efficiency @ 100% Load	86.5 %
Electrically Isolated Bearing	Not Electrically Isolated
Feedback Device	NO FEEDBACK
Front Shaft Indicator	None
Heater Indicator	No Heater
High Voltage Full Load Amps	2.3 a

Part Detail

Revision	B
Type	AC
Mech. spec.	35SS636
Base	
Status	PRD/A
Elec. spec.	35WGL955
Layout	35LYSS636
Eff. date	08-23-2023
CD Diagram	CD0005
Poles	04
Leads	9#18 Y
Proprietary	False
Created date	03-11-2022

Insulation Class	H
Inverter Code	Inverter Ready
KVA Code	M
Lifting Lugs	No Lifting Lugs
Locked Bearing Indicator	Locked Bearing
Max Speed	4000 rpm
Motor Lead Quantity/Wire Size	9 @ 18 AWG
Motor Lead Termination	Flying Leads
Motor Standards	NEMA
Motor Type	3524M
Mounting Arrangement	F1
Number of Poles	4
Overall Length	13.29 IN
Power Factor	72
Product Family	Wash Down Paint Free
Pulley End Bearing Type	Sealed Bearing
Pulley Face Code	C-Face
Pulley Shaft Indicator	Standard
Rodent Screen	None
Service Factor	1.00
Shaft Diameter	0.875 IN
Shaft Ground Indicator	No Shaft Grounding
Shaft Rotation	Reversible
Shaft Slinger Indicator	Shaft Slinger
Speed	1770 rpm
Speed Code	Single Speed
Starting Method	Direct on line
Thermal Device - Bearing	None
Thermal Device - Winding	Normally Closed Thermostat
Vibration Sensor Indicator	No Vibration Sensor
Winding Thermal 1	None
Winding Thermal 2	None

Nameplate

NP3956L									
CAT.NO.	IDVSWDM3554T								
SPEC.	35SS636L955G1								
FRAME	145TC		**H.P.**	1.5 TE					
VOLTS	230/460								
MAG. CUR.	3/1.5				**F.L. AMPS**	4.6/2.3			
R.P.M.	1770			**R.P.M. MAX**	2700				
HZ.	60	**PH.**	3	**CLASS**	H				
SER.F.	1.00	**DES.**	B	**SL HZ**	1				
NEMA NOM. EFF.	86.5	**WK2**	0.174						
BLWR V		**PH**		**HZ**		**AMPS**			
RATING	40C AMB-CONT								
DE BRG	6205		**ODE BRG**	6203					
CC	010A	**SN**							

Parts List

Part number	Description	Quantity
SA407581	SA 35SS636L955G1	1.000 ea
RA399080	RA 35SS636L955G1	1.000 ea
34FN3002B01	EXTERNAL FAN, PLASTIC, .637/.639 HUB W/	1.000 ea
NS2512A01	INSULATOR, CONDUIT BOX X	1.000 ea
35CB5001A21	CONDUIT BOX KIT, FOR SUPER II WASHDOWN	1.000 ea
11XW1032G06	10-32 X .38, TAPTITE II, HEX WSHR SLTD U	1.000 ea
HW3001B01	BRASS CUP WASHER, FOR #10 SCREW	1.000 ea
35EP3122B00U	MASTER ODE,203 BRG,.683SH,.125NPT DRNS,F	1.000 ea
HW4500S33	1/8 NPT STAINLESS #304 SS PLUG	3.000 ea
HW5100A03	WAVY WASHER (W1543-017)	1.000 ea
35EP3307E00U	MASTER DE,205 BRG,1.623SH,.125NPT DRNS,C	1.000 ea
HW4500S33	1/8 NPT STAINLESS #304 SS PLUG	3.000 ea
HW4606A02	JM CLIPPER/SEAL (LWE-0938-1624-AL23)	1.000 ea
12XN1032S20	10-32 X 1-1/4 HEX M.S. , STAINLESS STEEL	2.000 ea
HA1049A01	DUBO LOK WASHER SIZE 10 (NYLON LOCK SEAL	2.000 ea
HA1049A01	DUBO LOK WASHER SIZE 10 (NYLON LOCK SEAL	4.000 ea
51XB1214A16	12-14X1.00 HXWSSLD SERTYB	1.000 ea
35FH4005A53	IEC FH NO GREASER (CLEAN ONLY)	1.000 ea
11XW1032S06	10-32 X .38, TAPTITE II, HEX WSHR SLTD U	3.000 ea
HW4600B39SP	V-RING SLINGER 0.550 X 0.790 X .18 VITON	1.000 ea
HW2502D13	SS KEY, 3/16 SQ X 1.375	1.000 ea
HA7000A01	KEY RETAINER 7/8" DIA SHAFT	1.000 ea
MJ5001A02	732 CL SEALANT 3 OZ DIXIE BEARING 289100	0.001 ea
85XU0407S04	4X1/4 U DRIVE PIN STAINLESS	2.000 ea
LB1164	LABEL,WARNING AND DRAIN	1.000 ea
HA5027A02	HA4054 T-DRAIN X2 BAGGED WITH LABEL	1.000 ea
MJ1000A02	GREASE, POLYREX EM EXXON	0.050 lb
HA3100S24	THRUBOLT 8.625 LENGTH 1.250 TH LENGTH SS	4.000 ea
LC0145B01	CONNECTION LABEL	1.000 ea
NP3956L	SS WD INV UL CSA-EEV PREM CC REV MTG	1.000 ea
36PA1000	PKG GRP, PRINT PK1016A08	1.000 ea

PK3082	STYROFOAM CRADLE	1.000 ea
MN416A01	TAG-INSTAL-MAINT no wire (2500 bx)11/25	1.000 ea
FE-0000001	ZRTG FE ASSEMBLY	1.000 ea
PE-0000001	ZRTG PE ASSEMBLY	1.000 ea

AC Induction Motor Performance Data
Record # 95394
Typical performance - not guaranteed values

Winding: 35WGL955-R008	**Type:** 3524M	**Enclosure:** TEFC

Nameplate Data				**460 V, 60 Hz: High Voltage Connection**	
Rated Output (HP)			1.5	**Full Load Torque**	4.48 LB-FT
Volts			230/460	**Start Configuration**	direct on line
Full Load Amps			4.6/2.3	**Breakdown Torque**	18.8 LB-FT
R.P.M.			1770	**Pull-up Torque**	9.6 LB-FT
Hz	60	**Phase**	3	**Locked-rotor Torque**	12.6 LB-FT
NEMA Design Code	B	**KVA Code**	M	**Starting Current**	19.7 A
Service Factor (S.F.)			1	**No-load Current**	1.51 A
NEMA Nom. Eff.	86.5	**Power Factor**	72	**Line-line Res. @ 25ºC**	11.8 Ω
Rating - Duty			40C AMB-CONT	**Temp. Rise @ Rated Load**	48°C
				Locked-rotor Power Factor	58.4
				Rotor inertia	0.173 lb-ft²

Load Characteristics 460 V, 60 Hz, 1.5 HP

% of Rated Load	**25**	**50**	**75**	**100**	**125**	**150**
Power Factor	31	49	63	72	78	81
Efficiency	75.1	83.5	86	86.5	85.8	84.8
Speed	1792	1785	1777	1769	1760	1750
Line amperes	1.56	1.72	1.97	2.28	2.65	3.06

ABB Motors and Mechanical Inc.

WINDING # 35WGL955

1.5 HP 3 PH 60 HZ 1770 RPM 460 V 3524M

Typical performance - not guaranteed values.

TORQUES(LB-FT): PO=18.8 PU=9.6 LR=12.6 LRA=19.7

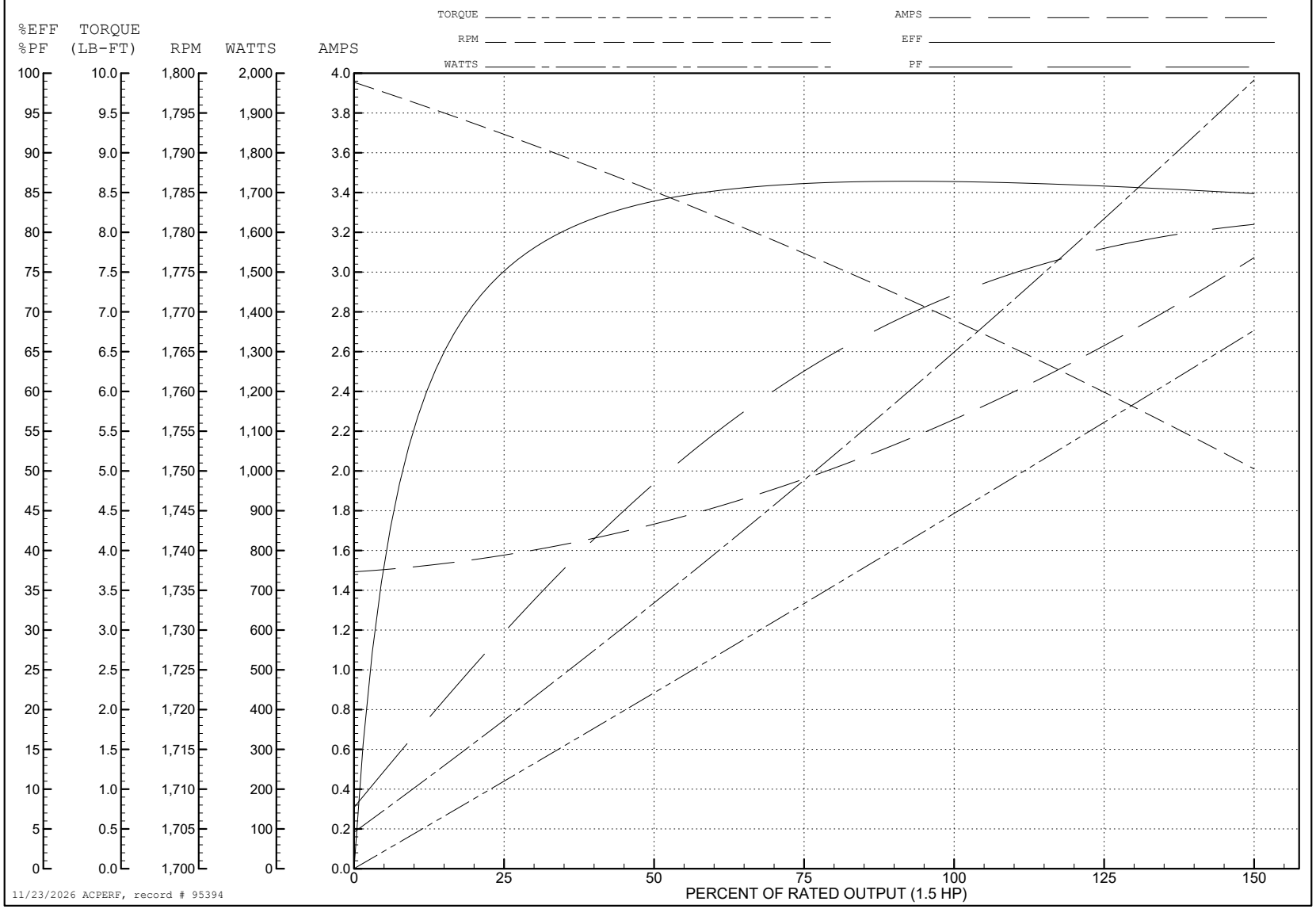

11/23/2026 ACPERF, record # 95394

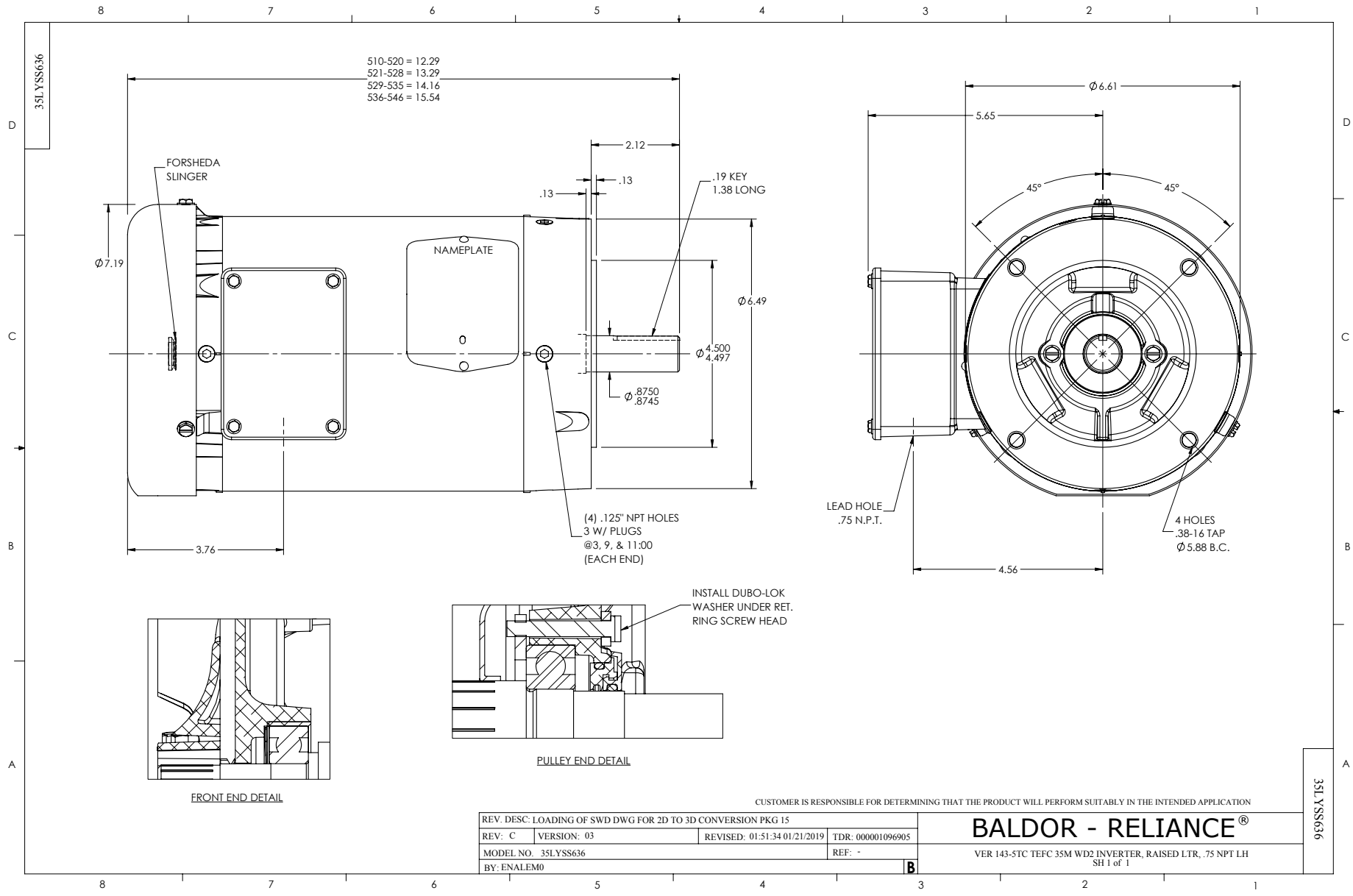
35LYSS636
510-520 = 12.29
521-528 = 13.29
529-535 = 14.16
536-546 = 15.54
FORSHEDA SLINGER
2.12
.13
.13
.19 KEY
1.38 LONG
NAMEPLATE
Ø7.19
Ø6.49
Ø4.500
4.497
Ø.8750
.8745
(4) .125" NPT HOLES
3 W/ PLUGS
@3, 9, & 11:00
(EACH END)
3.76
Ø6.61
5.65
45°
45°
LEAD HOLE
.75 N.P.T.
4 HOLES
.38-16 TAP
Ø5.88 B.C.
4.56
INSTALL DUBO-LOK
WASHER UNDER RET.
RING SCREW HEAD
FRONT END DETAIL
PULLEY END DETAIL
CUSTOMER IS RESPONSIBLE FOR DETERMINING THAT THE PRODUCT WILL PERFORM SUITABLY IN THE INTENDED APPLICATION
REV. DESC: LOADING OF SWD DWG FOR 2D TO 3D CONVERSION PKG 15
REV: C
VERSION: 03
REVISED: 01:51:34 01/21/2019
TDR: 000001096905
MODEL NO. 35LYSS636
REF: -
BY: ENALEM0
B
BALDOR - RELIANCE®
VER 143-5TC TEFC 35M WD2 INVERTER, RAISED LTR, .75 NPT LH
SH 1 of 1
35LYSS636

CD0005

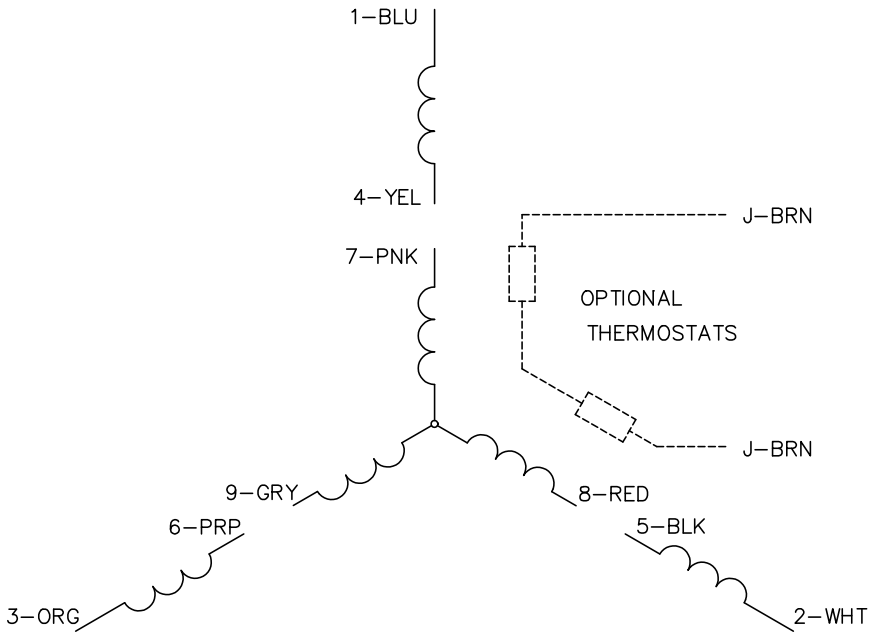

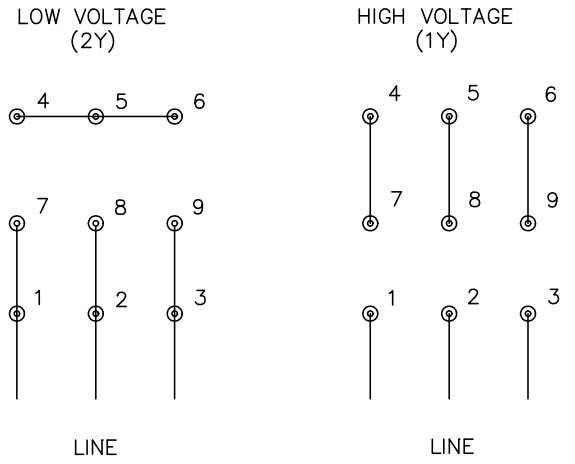

NOTES:

1. INTERCHANGE ANY TWO LINE LEADS TO REVERSE ROTATION.
2. OPTIONAL THERMOSTATS ARE PROVIDED WHEN SPECIFIED.
3. ACTUAL NUMBER OF INTERNAL PARALLEL CIRCUITS MAY BE A MULTIPLE OF THOSE SHOWN ABOVE.
4. LEAD COLORS ARE OPTIONAL. LEADS MUST ALWAYS BE NUMBERED AS SHOWN.

CD0005

REV. DESC: REVISE TO SHOW OPTIONAL COLORS			BALDOR ELECTRIC Co.
REV. LTR: E	BY: JLP	REVISED: 01/19/99 10:15	TDR: 0171435
CD0005		FILE: AAA00005140	MDL: –
		MTL: –	3PH, DV, 9 LEADS