Customer information packet

L3507

.75HP, 1725RPM, 1PH, 60HZ, 56, 3428LC, TEFC, F1
Class - None
Division - Not Applicable

Copyright © All product information within this document is subject to ABB Motors and Mechanical Inc. copyright © protection, unless otherwise noted.
8/12/2026 12:35:32 AM

Specifications

Enclosure	TEFC
Frame	56
Frame Material	Steel
Frequency	60.00 Hz
Haz Area Class and Group	None
Haz Area Division	Not Applicable
Motor Letter Type	Cap Start, Cap Run
Output @ Frequency	.750 HP @ 60 HZ
Phase	1
Synchronous Speed @ Frequency	1800 RPM @ 60 HZ
Voltage @ Frequency	115.0 V @ 60 HZ 230.0 V @ 60 HZ
Agency Approvals	C UR US
Ambient Temperature	40 °C
Auxiliary Box	NO AUXILLARY BOX
Auxiliary Box Lead Termination	None
Base Indicator	Rigid
Bearing Grease Type	Polyrex EM (-20F +300F)
Blower	None
Current @ Voltage	4.200 A @ 230.0 V 4.400 A @ 208.0 V 8.400 A @ 115.0 V
Design Code	N
Drip Cover	No Drip Cover
Duty Rating	CONT
Efficiency @ 100% Load	72.0 %
Electrically Isolated Bearing	Not Electrically Isolated
Feedback Device	NO FEEDBACK
Front Shaft Indicator	None
Heater Indicator	No Heater
High Voltage Full Load Amps	4.2 a
Insulation Class	F

Part Detail

Revision	E
Type	AC
Mech. spec.	34G426
Base	
Status	PRD/A
Elec. spec.	34WGR714
Layout	34LYG426
Eff. date	10-25-2024
CD Diagram	CD0055
Poles	04
Leads	6#18
Proprietary	False
Created date	11-19-2020

Inverter Code	Not Inverter
KVA Code	J
Lifting Lugs	No Lifting Lugs
Locked Bearing Indicator	No Locked Bearing
Motor Lead Quantity/Wire Size	6 @ 18 AWG
Motor Lead Termination	Flying Leads
Motor Standards	NEMA
Motor Type	3428LC
Mounting Arrangement	F1
Number of Poles	4
Overall Length	12.47 IN
Power Factor	78
Product Family	General Purpose
Pulley End Bearing Type	Ball
Pulley Face Code	Standard
Pulley Shaft Indicator	Standard
Rodent Screen	None
RoHS Status	ROHS COMPLIANT
Service Factor	1.25
Shaft Diameter	0.625 IN
Shaft Ground Indicator	No Shaft Grounding
Shaft Rotation	Reversible
Shaft Slinger Indicator	No Slinger
Speed	1725 rpm
Speed Code	Single Speed
Starting Method	Direct on line
Thermal Device - Bearing	None
Thermal Device - Winding	None
Vibration Sensor Indicator	No Vibration Sensor
Winding Thermal 1	None
Winding Thermal 2	None

Nameplate

NP1256L							
CAT.NO.	L3507						
SPEC.	34G426R714						
HP	.75						
VOLTS	115/230						
AMP	8.4/4.2						
RPM	1725						
FRAME	56	**HZ**	60		**PH**	1	
SER.F.	1.25	**CODE**	J	**DES**	N	**CLASS**	F
NEMA-NOM-EFF	72	**PF**	78				
RATING	40C AMB-CONT						
CC							
DE	6203	**ODE**	6203				
ENCL	TEFC	**SN**					
	SFA 10/5						

Parts List

Part number	Description	Quantity
SA388043	SA 34G426R714	1.000 ea
RA378385	RA 34G426R714	1.000 ea
OC3020F12SP	CAPACITORS 20 MFD 370 VAC	1.000 ea
EC1270A02SP	ELEC CAP, 270-324 MFD, 125V, 1.48D X 3.	1.000 ea
NS2512A01	INSULATOR, CONDUIT BOX X	1.000 ea
34CB3002A	CB CAST W/.88 DIA HOLE	1.000 ea
34GS1029A01	GASKET, CONDUIT BOX	1.000 ea
51XB1016A07	10-16 X 7/16 HXWSSLD SERTYB	2.000 ea
11XW1032G06	10-32 X .38, TAPTITE II, HEX WSHR SLTD U	1.000 ea
51XW0832A07	8-32 X .44, TAPTITE II, HEX WSHR SLTD SE	2.000 ea
34EP3102A01SP	FR ENDPLATE, MACH	1.000 ea
34CB3801	CAPACITOR BOX, DIE CAST	1.000 ea
34GS3002	GASKET, CAPACITOR BOX	1.000 ea
34GS5003A01	FOAM SLEEVE, ID = 2 1/16" X 4 3/8"	1.000 ea
MG1050G01	CELEROL MEDIUM CHARCOAL METALLIC GRAY	0.014 ga
51XB1214A08	12-14 X 1/2HX WS SL SR TYBX	2.000 ea
HW5100A03	WAVY WASHER (W1543-017)	1.000 ea
34EP3102A02SP	FR/PU ENDPLATE, MACH	1.000 ea
XY1032A02	10-32 HEX NUT DIRECTIONAL SERRATION	4.000 ea
34FN3002A01SP	EXTERNAL FAN, PLASTIC, .637/.639 HUB W/	1.000 ea
34FH4002A01SP	IEC FH NO GREASER PRIMED	1.000 ea
51XW1032A06	10-32 X .38, TAPTITE II, HEX WSHR SLTD S	3.000 ea
34CB4517	CB LID 4 MTG HOLES .22 DIA STAMPED, FOR	1.000 ea
34GS1031A01	GASKET, FLAT CONDUIT BOX LID (LEXIDE)	1.000 ea
51XW0832A07	8-32 X .44, TAPTITE II, HEX WSHR SLTD SE	4.000 ea
HW2501D13	KEY, 3/16 SQ X 1.375	1.000 ea
HA7000A04	KEY RETAINER 0.625 DIA SHAFTS	1.000 ea
34GS5003A01	FOAM SLEEVE, ID = 2 1/16" X 4 3/8"	2.000 ea
85XU0407S04	4X1/4 U DRIVE PIN STAINLESS	2.000 ea
SP5051B17	MDL 34 TORQ STAT SW,TYPE LC, STD F1 & F2	1.000 ea
HA3100A37	THRUBOLT 10-32 X 8.500	4.000 ea

LC0001A01	CONN LABEL / WARNING LABEL (LC0001 / LB1	1.000 ea
NP1256L	ALUM UL CC INDUSTRIAL MOTOR A60	1.000 ea
35PA1066	PKG GRP, PRINT PK1008A07	1.000 ea
MN416A01	TAG-INSTAL-MAINT no wire (2500 bx)11/25	1.000 ea

Accessories

Part number	Description	Multiplier
34-171	C FACE KIT	A8

AC Induction Motor Performance Data
Record # 85524
Typical performance - not guaranteed values

Winding: 34WGR714-R001	**Type:** 3428LC	**Enclosure:** TEFC

Nameplate Data				**230 V, 60 Hz: High Voltage Connection**	
Rated Output (HP)			.75	**Full Load Torque**	2.25 LB-FT
Volts			115/230	**Start Configuration**	direct on line
Full Load Amps			8.4/4.2	**Breakdown Torque**	5.4 LB-FT
R.P.M.			1725	**Pull-up Torque**	5.1 LB-FT
Hz	60	**Phase**	1	**Locked-rotor Torque**	7.04 LB-FT
NEMA Design Code	N	**KVA Code**	J	**Starting Current**	24.54 A
Service Factor (S.F.)			1.25	**No-load Current**	2.39 A
NEMA Nom. Eff.	72	**Power Factor**	78	**Line-line Res. @ 25ºC**	0.726 Ω A Ph 3.03 Ω B Ph
Rating - Duty			40C AMB-CONT	**Temp. Rise @ Rated Load**	66°C
S.F. Amps			10/5	**Temp. Rise @ S.F. Load**	84°C
				Locked-rotor Power Factor	83
				Rotor inertia	0.0665 lb-ft²

Load Characteristics 230 V, 60 Hz, 0.75 HP

% of Rated Load	**25**	**50**	**75**	**100**	**125**	**150**	**S.F.**
Power Factor	46	62	73	80	83	83	83
Efficiency	52.6	68.4	72.5	73.5	73	69.2	73
Speed	1780	1765	1747	1727	1704	1670	1704
Line amperes	2.54	2.9	3.45	4.09	4.92	6.06	4.92

ABB Motors and Mechanical Inc.

WINDING # 34WGR714

Typical performance - not guaranteed values.

0.75 HP 1 PH 60 HZ 1725 RPM 230 V 3428LC

TORQUES(LB-FT): PO=5.4 PU=5.1 LR=7.04 LRA=24.54

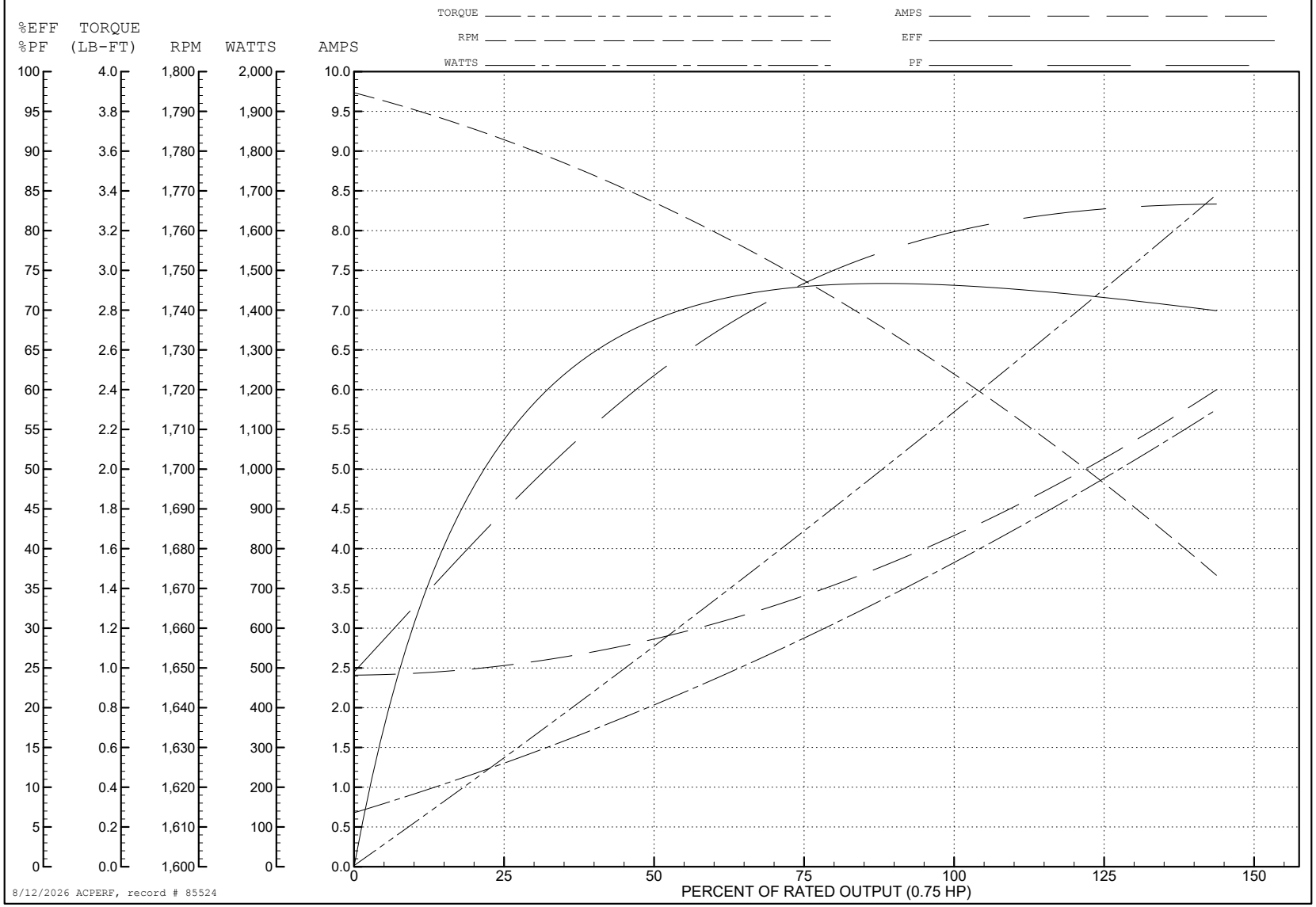

8/12/2026 ACPERF, record # 85524

AC Induction Motor Performance Data
Record # 85532
Typical performance - not guaranteed values

Winding: 34WGR714-R001	**Type:** 3428LC	**Enclosure:** TEFC

Nameplate Data				**115 V, 60 Hz: Low Voltage Connection**	
Rated Output (HP)			.75	**Full Load Torque**	2.26 LB-FT
Volts			115/230	**Start Configuration**	direct on line
Full Load Amps			8.4/4.2	**Breakdown Torque**	5.41 LB-FT
R.P.M.			1725	**Pull-up Torque**	5.31 LB-FT
Hz	60	**Phase**	1	**Locked-rotor Torque**	7.32 LB-FT
NEMA Design Code	N	**KVA Code**	J	**Starting Current**	47.96 A
Service Factor (S.F.)			1.25	**No-load Current**	4.78 A
NEMA Nom. Eff.	72	**Power Factor**	78	**Line-line Res. @ 25ºC**	0.726 Ω A Ph 3.03 Ω B Ph
Rating - Duty			40C AMB-CONT	**Temp. Rise @ Rated Load**	66°C
S.F. Amps			10/5	**Temp. Rise @ S.F. Load**	82°C
				Locked-rotor Power Factor	85.8
				Rotor inertia	0.0665 lb-ft²

Load Characteristics 115 V, 60 Hz, 0.75 HP

% of Rated Load	**25**	**50**	**75**	**100**	**125**	**150**	**S.F.**
Power Factor	46	62	73	80	83	84	83
Efficiency	52.7	68.4	72.5	73.6	72.8	69	72.8
Speed	1780	1765	1747	1726	1703	1670	1703
Line amperes	5.07	5.78	6.88	8.16	9.82	12.09	9.82

ABB Motors and Mechanical Inc.

WINDING # 34WGR714

0.75 HP 1 PH 60 HZ 1725 RPM 115 V 3428LC

Typical performance - not guaranteed values.

TORQUES(LB-FT): PO=5.41 PU=5.31 LR=7.32 LRA=47.96

TORQUE ____ ____ ____ ____ ____ ____ AMPS ____ ____ ____ ____ ____ ____

RPM ____ ____ ____ ____ ____ ____ EFF _____

WATTS ____ ____ ____ ____ ____ ____ PF _____ _____ _____

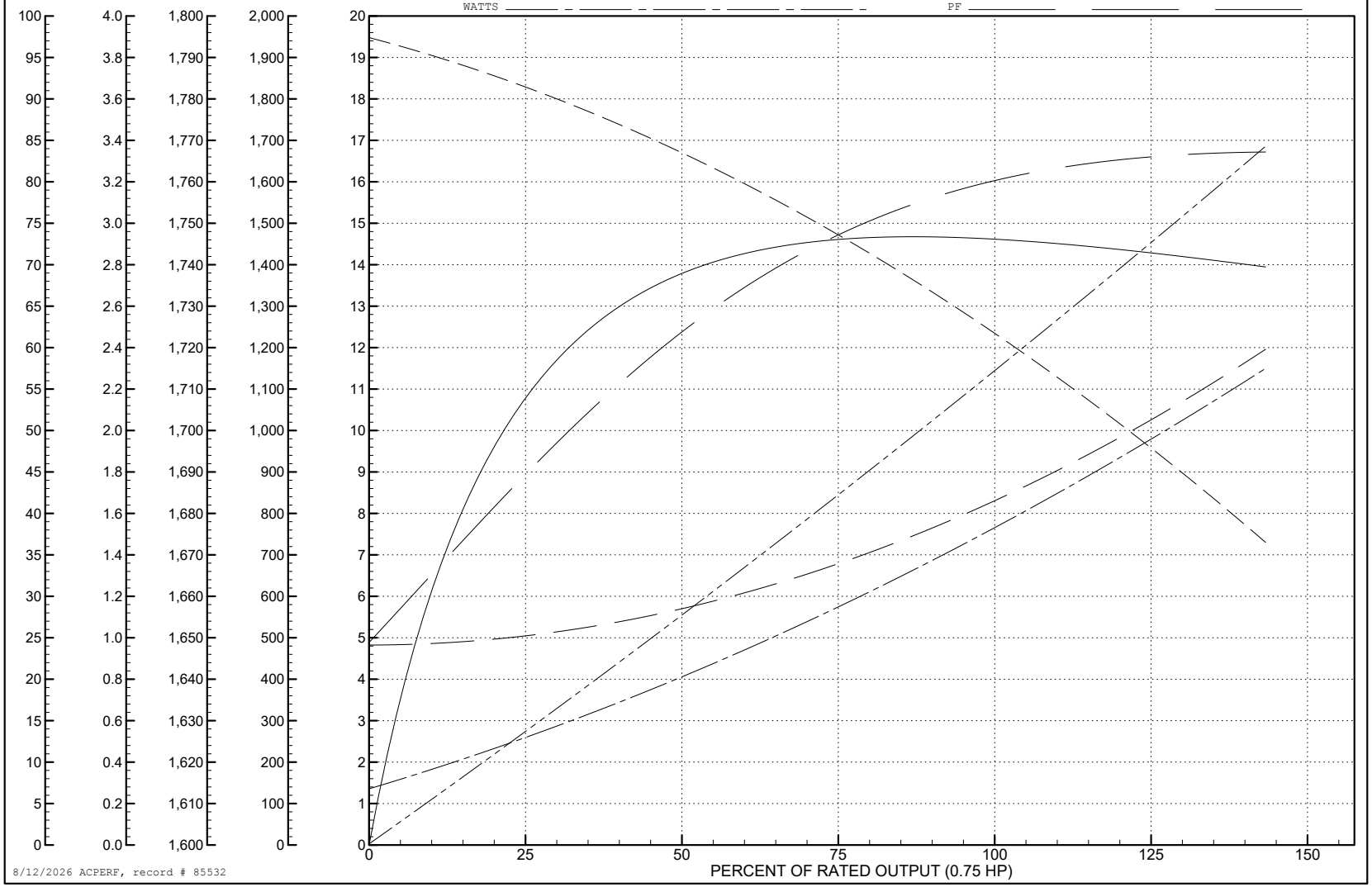

8/12/2026 ACPERF, record # 85532

34LYG426

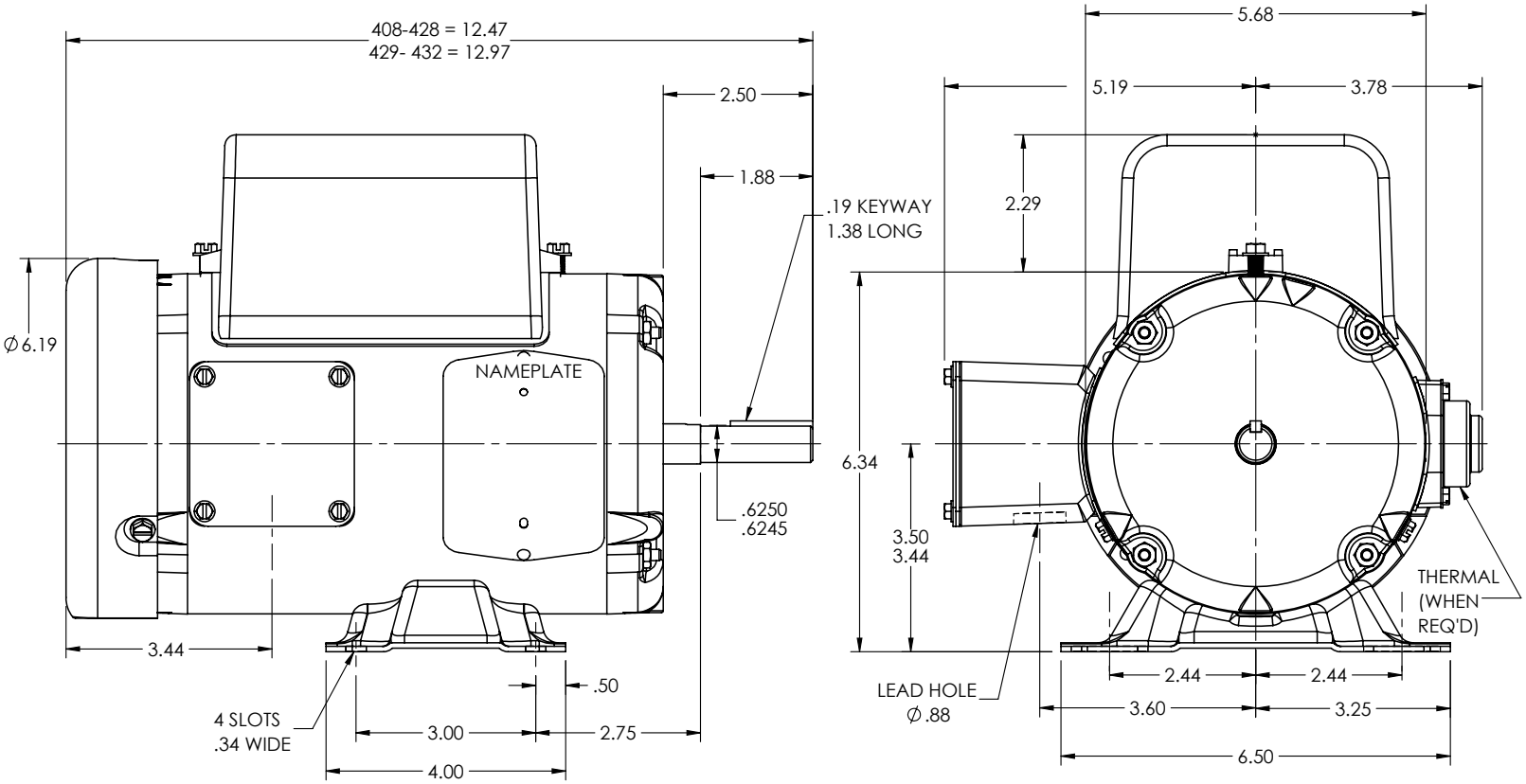

CUSTOMER IS RESPONSIBLE FOR DETERMINING THAT THE PRODUCT WILL PERFORM SUITABLY IN THE INTENDED APPLICATION

REV. DESC: LOAD TO SOLIDWORKS				BALDOR - RELIANCE®
REV: C	VERSION: 02	REVISED: 04:08:09 08/09/2022	TDR: 000001194274	
34LYG426	MODEL NO. 34LYG426		REF: -	SPL HORZ 34LC NEMA 56 TEFC
	BY: ENFRAJ0			

34LYG426

CD0055

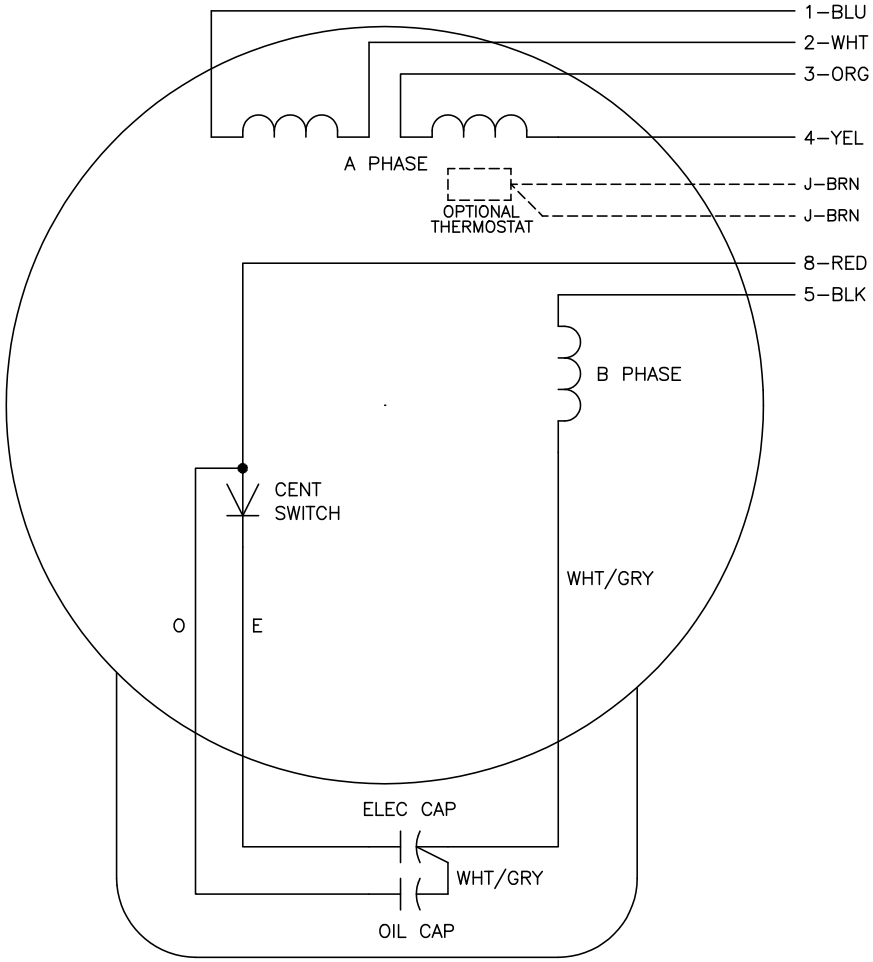

	LINE A	LINE B	JOIN
HIGH STD	1	4,5	2,3,8
HIGH OPP	1	4,8	2,3,5
LOW STD	1,3,8	2,4,5	–
LOW OPP	1,3,5	2,4,8	–

NOTES:

1. STANDARD ROTATION IS CCW FACING END OPPOSITE SHAFT EXTENSION.
2. OPTIONAL THERMOSTAT IS PROVIDED WHEN SPECIFIED.
3. MULTIPLE CAPACITORS ARE CONNECTED IN PARALLEL UNLESS OTHERWISE SPECIFIED.
4. LEAD COLORS ARE OPTIONAL. LEADS MUST ALWAYS BE NUMBERED AS SHOWN.

REV. DESC: REVISE TO SHOW OPTIONAL COLORS			
REV. LTR: D	BY: JLP	REVISED: 04/08/99 1:17	TDR: 0178636
CD0055		FILE: AAA00007414	MDL: –
		MTL: –	

BALDOR ELECTRIC Co.

TYPE LC, DV, REV, 6 LEADS

CD0055