ABB BALDOR RELIANCE

Customer information packet

VFSWDM3558T-E

2HP, 1760RPM, 3PH, 60HZ, 145TC, 3532M, TEFC, N
Class - None
Division - Not Applicable

Copyright © All product information within this document is subject to ABB Motors and Mechanical Inc. copyright © protection, unless otherwise noted.
11/23/2026 2:38:49 AM

Specifications

Enclosure	TEFC
Frame	145TC
Frame Material	Stainless Steel
Frequency	60.00 Hz
Haz Area Class and Group	None
Haz Area Division	Not Applicable
Motor Letter Type	Three Phase
Output @ Frequency	2.000 HP @ 60 HZ
Phase	3
Synchronous Speed @ Frequency	1800 RPM @ 60 HZ
Voltage @ Frequency	460.0 V @ 60 HZ
	230.0 V @ 60 HZ
Agency Approvals	CURUSEEV
	NEMA PREMIUM
	WEEE
Ambient Temperature	40 °C
Auxiliary Box	NO AUXILLARY BOX
Auxiliary Box Lead Termination	None
Base Indicator	No Mounting
Bearing Grease Type	Polyrex EM (-20F +300F)
Blower	None
Current @ Voltage	5.600 A @ 230.0 V
	6.000 A @ 208.0 V
	2.800 A @ 460.0 V
Design Code	B
Drip Cover	No Drip Cover
Duty Rating	CONT
Efficiency @ 100% Load	86.5 %
Electrically Isolated Bearing	Not Electrically Isolated
Feedback Device	NO FEEDBACK
Front Shaft Indicator	None
Heater Indicator	No Heater

Part Detail

Revision	A
Type	AC
Mech. spec.	35E4709
Base	
Status	PRD/A
Elec. spec.	35WGK632
Layout	35LYE4709
Eff. date	09-08-2026
CD Diagram	CD0005
Poles	04
Leads	9#18
Proprietary	False
Created date	02-28-2025

High Voltage Full Load Amps	2.8 a
Insulation Class	H
Inverter Code	Inverter Duty
KVA Code	L
Lifting Lugs	No Lifting Lugs
Locked Bearing Indicator	Locked Bearing
Max Speed	2700 rpm
Motor Finish	UNPAINTED
Motor Lead Quantity/Wire Size	9 @ 18 AWG
Motor Lead Termination	Flying Leads
Motor Standards	NEMA
Motor Type	3532M
Mounting Arrangement	F1
Number of Poles	4
Overall Length	14.03 IN
Power Factor	77
Product Family	WD All SS Encapsulated
Pulley End Bearing Type	Sealed Bearing
Pulley Face Code	C-Face
Pulley Shaft Indicator	Standard
Rodent Screen	None
Service Factor	1.15
Shaft Diameter	0.875 IN
Shaft Ground Indicator	No Shaft Grounding
Shaft Rotation	Reversible
Shaft Slinger Indicator	No Slinger
Speed	1760 rpm
Speed Code	Single Speed
Starting Method	Direct on line
Thermal Device - Bearing	None
Thermal Device - Winding	None
Vibration Sensor Indicator	No Vibration Sensor
Winding Thermal 1	None
Winding Thermal 2	None

Nameplate

NP4427AAA01												
CAT #	VFSWDM3558T-E			**WT**	51	**LBS**						
SPEC	35E4709K632G1			**ENCL**	TEFC							
SER #				**CC**	010A	**IP**	69					
HP	2			**MAG CUR**	3.2/1.6							
VOLTS	230/460					**NEMA NOM. EFF**	86.5					
AMPS	5.6/2.8					**PF**	77					
RATING	40C AMB-CONT											
RPM	1760				**MAX RPM**	2700						
FRAME	145TC	**HZ**	60	**CODE**	L	**CLASS**	H					
SER.F.	1.15	**SF AMP**	6.3/3.15			**PH**	3	**DES**	B			
DE	6205			**ODE**	6205							
LUBRICATION	POLYREX EM											
ID LOGO		**INVERTER TYPE**		**VPWM**		**CHP**	60	**TO**	90		1.5:1	
ID LOGO	**WK2**	0.232	**CT**	15	**TO**	60		4:1				
ID LOGO	**SL HZ**	1.2	**VT**	3	**TO**	60		20:1				
						QR						
YR												

Parts List

Part number	Description	Quantity
SA435350	SA 35E4709K632G1	1.000 ea
RA427664	RA 35E4709K632G1	1.000 ea
34FN3002B01	EXTERNAL FAN, PLASTIC, .637/.639 HUB W/	1.000 ea
35CB1017A02	5/36 MID SECT - 3 PC. CONDUIT BOX 3/4 N	1.000 ea
HA3424S48	STUD - M6X1.0 THDS X 3.00"	1.000 ea
RM1070A81	O-RING, -043 VITON/FKM .070CS X 3.489ID	1.000 ea
11XW1032G08	10-32 X .50, TAPTITE II, HEX WSHR SLTD U	1.000 ea
HW3001B01	BRASS CUP WASHER, FOR #10 SCREW	1.000 ea
35EP1940A05	FRONT TEFC 205 BRG (STAINLESS)	1.000 ea
RM1070A25	O-RING, VITON/FKM .070CS X 6.190ID	1.000 ea
HW4600G01	.984X1.499X.25 VITON SLICK SERIES LIP	1.000 ea
HW4600E99	25 X 42 X 6 AFX SEAL, GRAPHITE INFUSED V	1.000 ea
HW5002A103	RET RING N5002-206 WALDES KOHINOOR	1.000 ea
HW4500S33	1/8 NPT STAINLESS #304 SS PLUG	4.000 ea
RM1070A26	O-RING,4.5MM I.D.X1.5MM C.S. (VITON)	4.000 ea
HW4500S33	1/8 NPT STAINLESS #304 SS PLUG	4.000 ea
HW5100A05	WVY WSHR F/205 & 304 BRGS	1.000 ea
RM1006A03	GROMMET, #2867 1.12 HOLE (ATLANTIC INDIA	1.000 ea
35EP1935A02	PULLEY 56C/143-5TC ENCL 205 BRG	1.000 ea
RM1070A25	O-RING, VITON/FKM .070CS X 6.190ID	1.000 ea
HW4600G01	.984X1.499X.25 VITON SLICK SERIES LIP	1.000 ea
HW4600E99	25 X 42 X 6 AFX SEAL, GRAPHITE INFUSED V	1.000 ea
35FH4005A39	IEC FH NO GREASER DEBURR/CLEAN - SS	1.000 ea
10XN1032FS06	HEX HD CAP SCREW 10-32 X 3/8 SS FOOD SAF	3.000 ea
RM1070A81	O-RING, -043 VITON/FKM .070CS X 3.489ID	1.000 ea
35CB1513A01	35-36-37 MACH. LID - 3 PC. CONDUIT BOX	1.000 ea
HW2502D13	SS KEY, 3/16 SQ X 1.375	1.000 ea
HA7000A01	KEY RETAINER 7/8" DIA SHAFT	1.000 ea
MJ5001A27	32220KN GRAY SEALER *MIN BUY 4 QTS=1GAL	0.005 qt
MJ5004A93	FOOD GRADE (H1 RATED) ANTISEIZE THRD COM	0.005 ea
HA1025A21	WSHR,FELT .125" THK	1.000 ea

HA5027A09	DRAIN KIT,(2)HA4002A03 BAGGED W/LABEL	1.000 ea
MJ1000A02	GREASE, POLYREX EM EXXON	0.050 lb
19XB0818S12	8-18X3/4 HXWS TYB HIGH-LOW	1.000 ea
WD5603A01	KIT, CLOSED-END LEAD SPLICE (18-14GA)	1.000 ea
HA3100FS60	THRUBOLT, 10-32 X 10.375 SS FOOD SAFE	4.000 ea
36PA1001	PKG GRP, PRINT PK1017A07	1.000 ea
FE-0000016	ZTRG FE ASSEMBLY	1.000 ea
PK3082	STYROFOAM CRADLE	1.000 ea
MN416A01	TAG-INSTAL-MAINT no wire (2500 bx)11/25	1.000 ea
PE-0000010	ZRTG PE ASSEMBLY	1.000 ea

AC Induction Motor Performance Data
Record # 111071
Typical performance - not guaranteed values

Winding: 35WGK632-R001	**Type:** 3532M	**Enclosure:** TEFC

Nameplate Data			
Rated Output (HP)			2
Volts			230/460
Full Load Amps			5.6/2.8
R.P.M.			1760
Hz	60	**Phase**	3
NEMA Design Code	B	**KVA Code**	L
Service Factor (S.F.)			1.15
NEMA Nom. Eff.	86.5	**Power Factor**	77
Rating - Duty			40C AMB-CONT
S.F. Amps			6.3/3.15

460 V, 60 Hz: High Voltage Connection	
Full Load Torque	6.01 LB-FT
Start Configuration	direct on line
Breakdown Torque	22.9 LB-FT
Pull-up Torque	12.9 LB-FT
Locked-rotor Torque	16.3 LB-FT
Starting Current	24.4 A
No-load Current	1.55 A
Line-line Res. @ 25ºC	8.6033 Ω
Temp. Rise @ Rated Load	66°C
Temp. Rise @ S.F. Load	81°C
Locked-rotor Power Factor	53.6
Rotor inertia	0.231 lb-ft²

Load Characteristics 460 V, 60 Hz, 2 HP

% of Rated Load	**25**	**50**	**75**	**100**	**125**	**150**	**S.F.**
Power Factor	37	57	70	78	82	85	80
Efficiency	78.6	85.5	86.9	86.6	85.5	84	85.9
Speed	1789.9	1780.7	1770.8	1760.2	1748.4	1735.8	1753
Line amperes	1.67	1.94	2.33	2.81	3.35	3.94	3.13

ABB Motors and Mechanical Inc.

WINDING # 35WGK632

2 HP 3 PH 60 HZ 1760 RPM 460 V 3532M

Typical performance - not guaranteed values.

TORQUES(LB-FT): PO=22.9 PU=12.9 LR=16.3 LRA=24.4

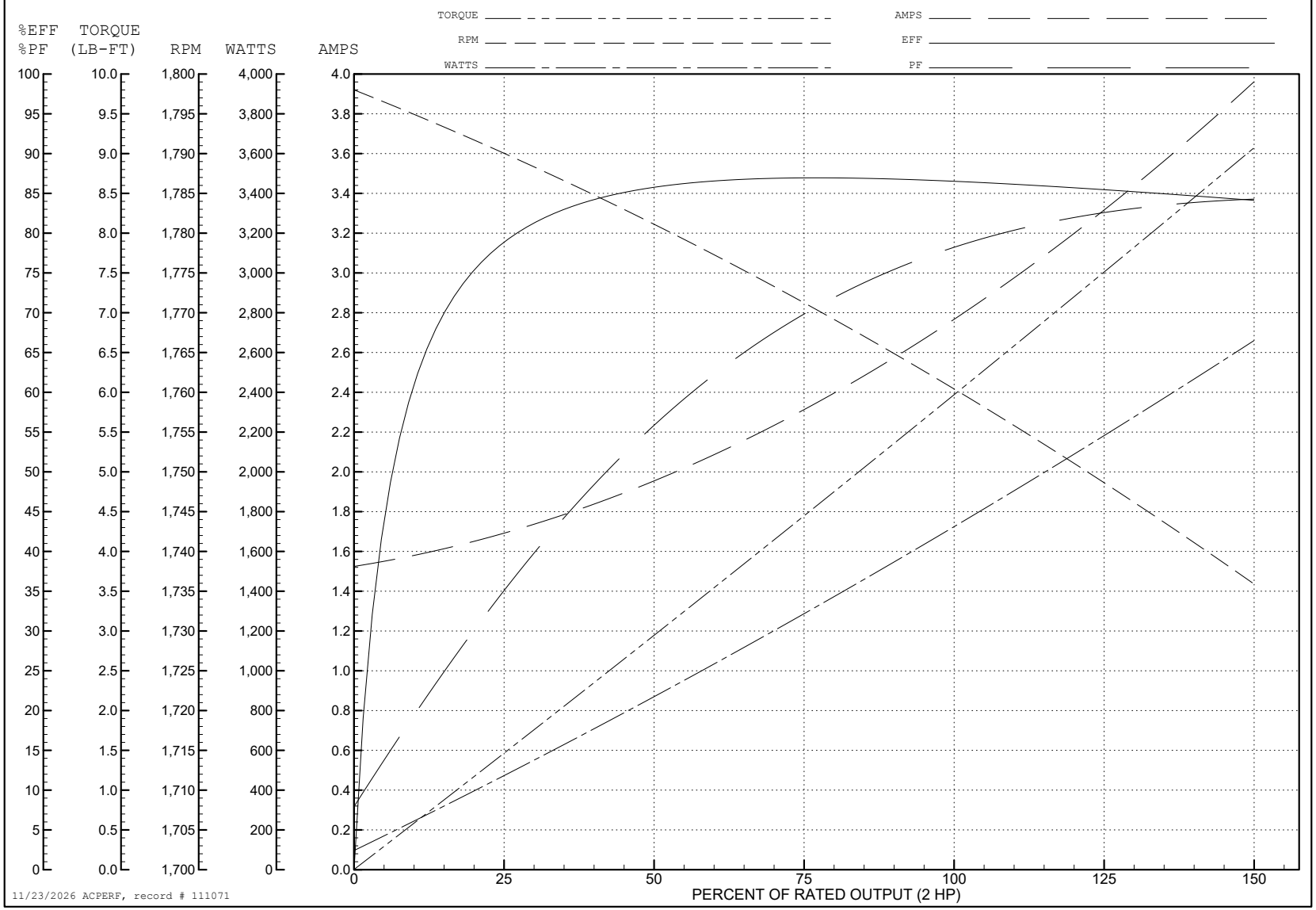

11/23/2026 ACPERF, record # 111071

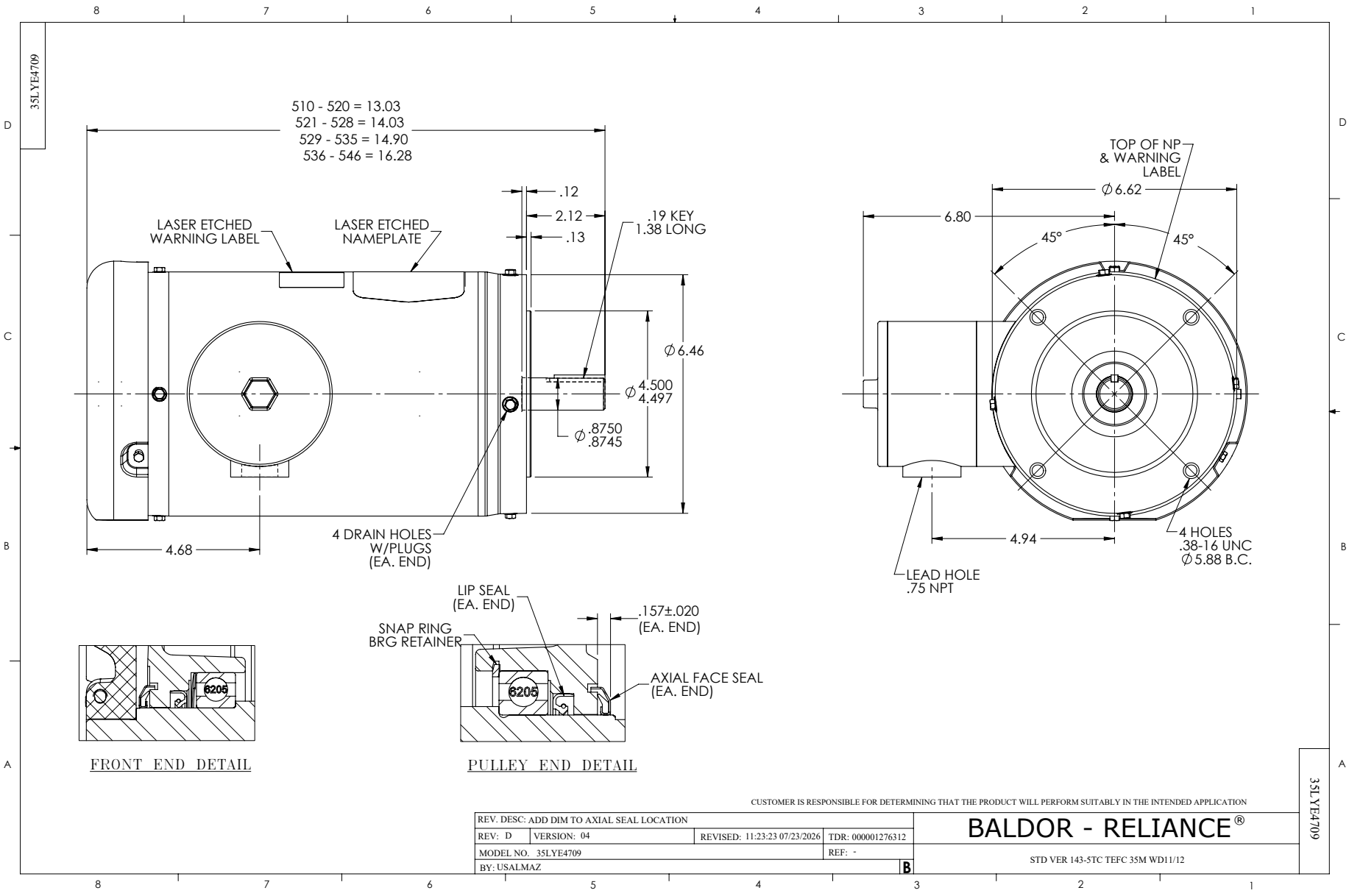
35LYE4709
510 - 520 = 13.03
521 - 528 = 14.03
529 - 535 = 14.90
536 - 546 = 16.28
.12
2.12
.13
.19 KEY
1.38 LONG
LASER ETCHED
WARNING LABEL
LASER ETCHED
NAMEPLATE
Ø6.46
Ø4.500
4.497
Ø.8750
.8745
4.68
4 DRAIN HOLES
W/PLUGS
(EA. END)
TOP OF NP
& WARNING
LABEL
Ø6.62
6.80
45°
45°
4.94
4 HOLES
.38-16 UNC
Ø5.88 B.C.
LEAD HOLE
.75 NPT
LIP SEAL
(EA. END)
.157±.020
(EA. END)
SNAP RING
BRG RETAINER
AXIAL FACE SEAL
(EA. END)
6205
6205
FRONT END DETAIL
PULLEY END DETAIL
CUSTOMER IS RESPONSIBLE FOR DETERMINING THAT THE PRODUCT WILL PERFORM SUITABLY IN THE INTENDED APPLICATION
REV. DESC: ADD DIM TO AXIAL SEAL LOCATION
REV: D
VERSION: 04
REVISED: 11:23:23 07/23/2026
TDR: 000001276312
MODEL NO. 35LYE4709
REF: -
BY: USALMAZ
B
BALDOR - RELIANCE®
STD VER 143-5TC TEFC 35M WD11/12
35LYE4709

CD0005

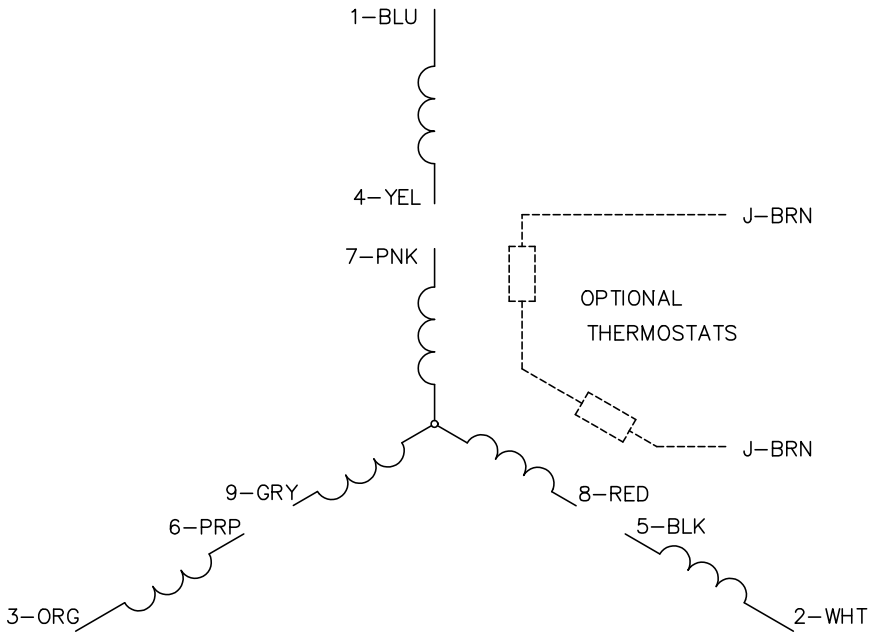

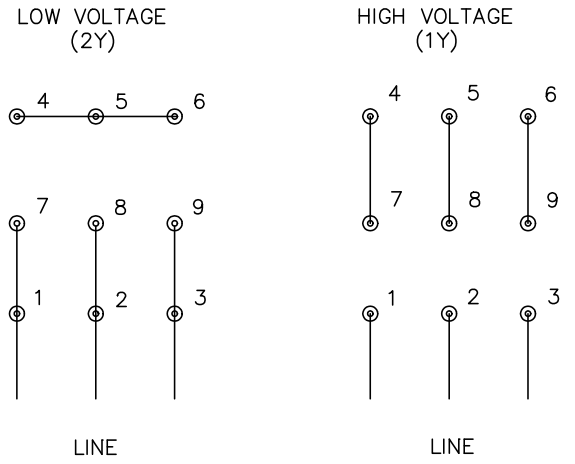

NOTES:

1. INTERCHANGE ANY TWO LINE LEADS TO REVERSE ROTATION.
2. OPTIONAL THERMOSTATS ARE PROVIDED WHEN SPECIFIED.
3. ACTUAL NUMBER OF INTERNAL PARALLEL CIRCUITS MAY BE A MULTIPLE OF THOSE SHOWN ABOVE.
4. LEAD COLORS ARE OPTIONAL. LEADS MUST ALWAYS BE NUMBERED AS SHOWN.

CD0005

REV. DESC: REVISE TO SHOW OPTIONAL COLORS			BALDOR ELECTRIC Co.
REV. LTR: E	BY: JLP	REVISED: 01/19/99 10:15	TDR: 0171435
CD0005		FILE: AAA00005140	MDL: –
		MTL: –	3PH, DV, 9 LEADS